COLOR*dash* Bar 3

User Manual

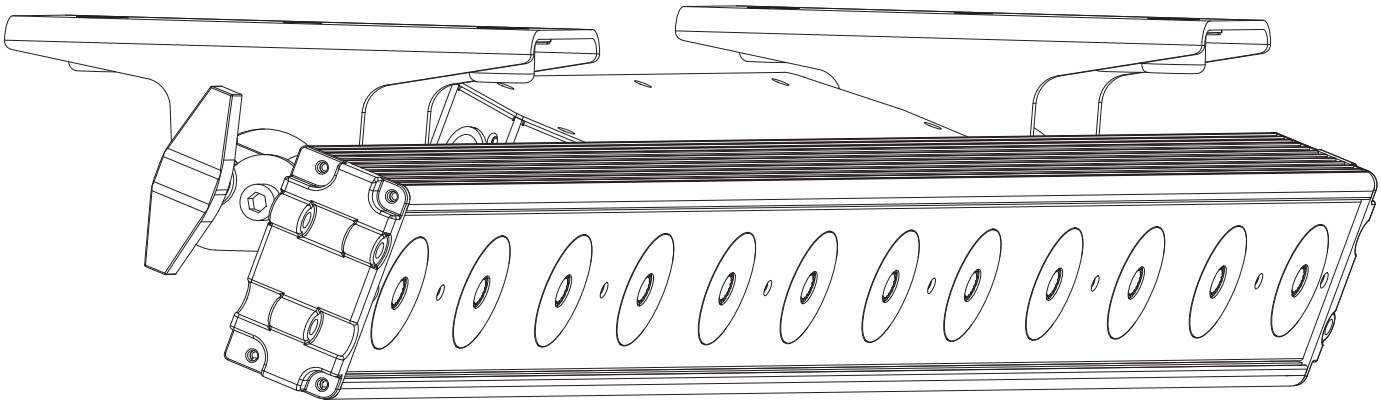

Model ID: COLORDASHBAR3

CHAUVET PROFESSIONAL

Edition Notes

The COLORdash Bar 3 User Manual includes a description, safety precautions, installation, programming, operation, and maintenance instructions for the COLORdash Bar 3 as of the release date of this edition.

Trademarks

Chauvet, Chauvet Professional, the Chauvet logo, and COLORdash are registered trademarks or trademarks of Chauvet & Sons, LLC (d/b/a Chauvet and Chauvet Lighting) in the United States and other countries. Other company and product names and logos referred to herein may be trademarks of their respective companies.

Copyright Notice

The works of authorship contained in this manual, including, but not limited to, all designs, text, and images are owned by Chauvet.

© Copyright 2026 Chauvet & Sons, LLC. All rights reserved.

Electronically published by Chauvet in the United States of America.

Manual Use

Chauvet authorizes its customers to download and print this manual for professional information purposes only. Chauvet expressly prohibits the usage, copy, storage, distribution, modification, or printing of this manual or its content for any other purpose without written consent from Chauvet.

Document Printing

For best results, print this document in color, on letter size paper (8.5 x 11 in), double-sided. If using A4 paper (210 x 297 mm), configure the printer to scale the content accordingly.

Intended Audience

Any person installing, operating, and/or maintaining this product should completely read through the guide that shipped with the product, as well as this manual, before installing, operating, or maintaining this product.

Disclaimer

Chauvet believes that the information contained in this manual is accurate in all respects. However, Chauvet assumes no responsibility and specifically disclaims any and all liability to any party for any loss, damage, or disruption caused by any errors or omissions in this document, whether such errors or omissions result from negligence, accident, or any other cause. Chauvet reserves the right to revise the content of this document without any obligation to notify any person or company of such revision. However, Chauvet has no obligation to make, and does not commit to make, any such revisions.

Document Revision

Go to www.chauvetprofessional.com for the latest version.

Revision	Date	Description
1	06/2026	Initial release.

TABLE OF CONTENTS

1. Before You Begin 1
- What Is Included 1
- Claims 1
- Text Conventions 1
- Symbols 1
- Safety Notes 2
- FCC Statement of Compliance 3
- Expected LED Lifespan 3

2. Introduction 4
- Features 4
- Product Overview 4
- Product Dimensions 5

3. Setup 6
- AC Power 6
  - AC Plug 6
  - Fuse Replacement 6
  - Power Linking 6
- Signal Connections 7
- DMX Linking 7
  - DMX Personalities 7
  - Remote Device Management 7
  - Master/Slave Connectivity 7
- USB Software Update 7
- Mounting 8
  - Orientation 8
  - Rigging 8
  - Procedure 8

4. Operation 10
- Control Panel Description 10
- Control Options 10
- Programming 10
- Passcode 10
- Menu Map 11
- DMX Configuration 14
  - DMX Personalities 14
  - Starting Address 14
- DMX Channel Assignments and Values 15
  - 59CH / 47CH / 42CH 15
  - 14CH / 13CH / 9CH / 8CH / 6CH 18
- Standalone Configuration 19
  - Static Mode 19
    - Fixed Color 19
    - Color Temperature 19
    - Manual Color Mixer 19
  - Auto Show 19
- Settings Configuration 20

Master/Slave 20
Dimmer Speed Mode 20
White Balance 20
Cell Order 20
LED Frequency 20
Display Backlight 20
Key Lock 20
Information 20
Factory Reset 20
5. Maintenance 21
Product Maintenance 21
6. Technical Specifications 22
Contact Us 23
Warranty & Returns 23

1. Before You Begin

What Is Included

- COLORdash Bar 3
- Seetronic Powerkon IP65 power cable
- 2 Omega brackets with mounting hardware
- Quick Reference Guide

Claims

Carefully unpack the product immediately and check the container to make sure all the parts are in the package and are in good condition.

If the box or the contents (the product and included accessories) appear damaged from shipping, or show signs of mishandling, notify the carrier immediately, not Chauvet. Failure to report damage to the carrier immediately may invalidate a claim. In addition, keep the box and contents for inspection.

For other issues, such as missing components or parts, damage not related to shipping, or concealed damage, file a claim with Chauvet within 7 days of delivery.

Text Conventions

Convention	Meaning
1–512	A range of values
50/60	A set of values of which only one can be chosen
Settings	A menu option not to be modified
<ENTER>	A key to be pressed on the product's control panel

Symbols

Symbol	Meaning
	Critical installation, configuration, or operation information. Not following these instructions may make the product not work, cause damage to the product, or cause harm to the operator.
	Important installation or configuration information. The product may not function correctly if this information is not used.
	Useful information.

Any reference to data or power connections in this manual assumes the use of Seetronic IP-rated cables.

The term "DMX" used throughout this manual refers to the USITT DMX512-A digital data transmission protocol.
Connection of the control signal: DMX line

- **The product has XLR sockets for DMX input and output.**
- **Notice: This control circuit is isolated and belongs to the Class 2 data port.**

The control circuit has a cumulative leakage current of less than 3.5 mA.

Safety Notes

Read all the following safety notes before working with this product. These notes contain important information about the installation, usage, and maintenance of this product.

This product contains no user-serviceable parts. Any reference to servicing in this User Manual will only apply to properly trained, certified technicians. Do not open the housing or attempt any repairs.

All applicable local codes and regulations apply to proper installation of this product.

- The luminaire is intended for professional use only.
- The luminaire should be positioned so that prolonged staring into the luminaire at a distance closer than 9.84 ft (3 m) is not expected.
- If the external flexible cable or cord of this luminaire is damaged, it shall be replaced by a special cord or cord exclusively available from the manufacturer or its service agent.
- The light source contained in this luminaire shall only be replaced by the manufacturer or its service agent or a similar qualified person.
- **CAUTION:**
  - This product's housing may be hot when operating. Mount this product in a location with adequate ventilation, at least 20 in (50 cm) from adjacent surfaces.
  - When transferring the product from extreme temperature environments, (e.g., cold truck to warm humid ballroom) condensation may form on the internal electronics of the product. To avoid causing a failure, allow the product to fully acclimate to the surrounding environment before connecting it to power.
  - Flashing light is known to trigger epileptic seizures. User must comply with local laws regarding notification of strobe use.
- **ALWAYS:**
  - Disconnect from power before cleaning the product or replacing the fuse.
  - Replace the fuse with the same type and rating.
  - Use a safety cable when mounting this product overhead.
  - Connect this product to a grounded and protected circuit.
- **DO NOT:**
  - Open this product. It contains no user-serviceable parts.
  - Look at the light source when the product is on.
  - Leave any flammable material within 50 cm of this product while operating or connected to power.
  - Connect this product to a dimmer or rheostat.
  - Operate this product if the housing, lenses, or cables appear damaged.
  - Operate this product outdoors or in any location where dust, excessive heat, water, or humidity may affect it (adhere to standards for the published IP rating).
- ONLY use the hanging/mounting bracket to carry this product.
- The maximum ambient temperature is 113 °F (45 °C). Do not operate this product at higher temperatures.
- The minimum ambient temperature is -4°F (-20°C). Do not operate the product at lower temperatures.
- To eliminate unnecessary wear and improve its lifespan, during periods of non-use completely disconnect the product from power via breaker or by unplugging it.
- In the event of a serious operating problem, stop using immediately.

If this Chauvet product requires service, contact Chauvet Technical Support.

FCC Statement of Compliance

This device complies with Part 15 Part B of the FCC rules. Operation is subject to the following two conditions:

1. This device may not cause harmful interference, and
2. This device must accept any interference received, including interference that may cause undesired operation.

This equipment has been tested and found to comply with the limits for a Class B digital device, pursuant to Part 15 of the FCC Rules. These limits are designed to provide reasonable protection against harmful interference in a residential installation. This equipment generates uses and can radiate radio frequency energy and, if not installed and used in accordance with the instructions, may cause harmful interference to radio communications. However, there is no guarantee that interference will not occur in a particular installation. If this equipment does cause harmful interference to radio or television reception, which can be determined by turning the equipment off and on, the user is encouraged to try to correct the interference by one or more of the following measures:

- Reorient or relocate the receiving antenna.
- Increase the separation between the equipment and receiver.
- Connect the equipment into an outlet on a circuit different from that to which the receiver is connected.
- Consult the dealer or an experienced radio/TV technician for help.

Any changes or modifications not expressly approved by the party responsible for compliance could void the user’s authority to operate the equipment.

Expected LED Lifespan

Over time, use and heat will gradually reduce LED brightness. Clustered LEDs produce more heat than single LEDs, contributing to shorter lifespans if always used at full intensity. The average LED lifespan is 40,000 to 50,000 hours. To extend LED lifespan, maintain proper ventilation around the product, and limit the overall intensity.

2. Introduction

Features

- RGBWA-UV LED wash for events and productions
- Slim and discreet design to hide and blend into any application
- Exceptionally wide color palette from 6-color LEDs

Product Overview

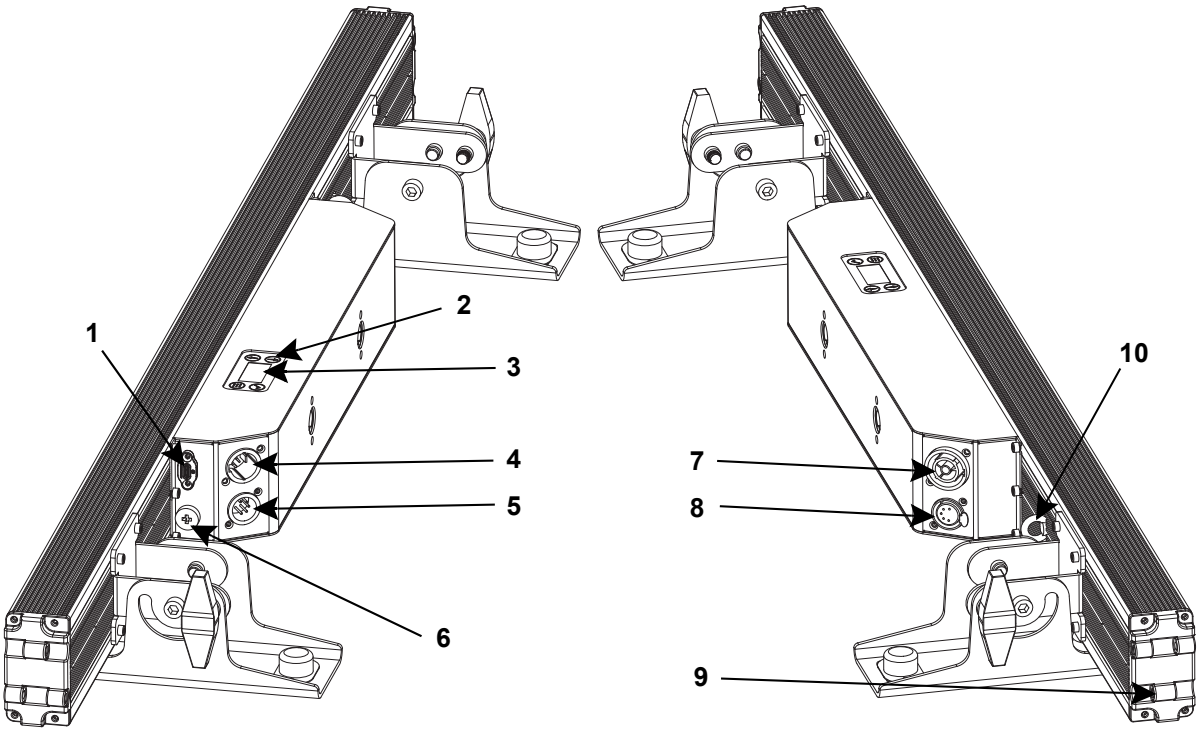

#	Name	#	Name
1	USB port	**6**	Fuse holder
2	Menu buttons	**7**	Power out
3	Display	**8**	5-pin DMX out
4	Power in	**9**	Alignment hardware
5	5-pin DMX in	**10**	Safety cable pass-through

Product Dimensions

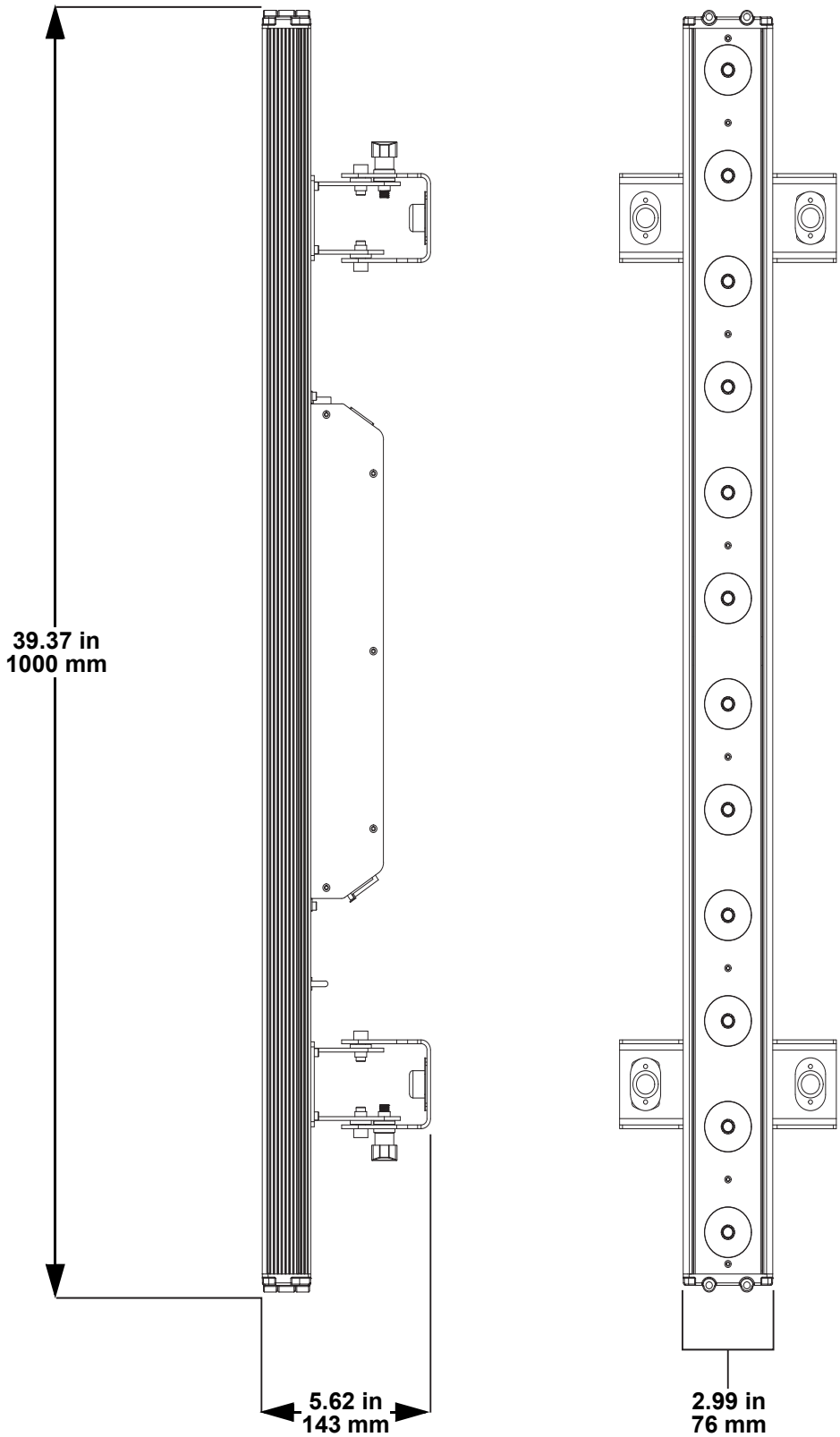

3. Setup

AC Power

The COLORdash Bar 3 has an auto-ranging power supply and it can work with an input voltage range of 100 to 240 VAC, 50/60 Hz.

To determine the product's power requirements (circuit breaker, power outlet, and wiring), use the current value listed on the label affixed to the product's back panel, or refer to the product's specifications chart. The listed current rating indicates the product's average current draw under normal conditions.

- **Always connect the product to a protected circuit (a circuit breaker or fuse). Ensure the product has an appropriate electrical ground to avoid the risk of electrocution or fire.**
- **To eliminate unnecessary wear and improve its lifespan, during periods of non-use completely disconnect the product from power via breaker or by unplugging it.**

Never connect the product to a rheostat (variable resistor) or dimmer circuit, even if the rheostat or dimmer channel serves only as a 0 to 100% switch.

AC Plug

The COLORdash Bar 3 comes with a power input cable terminated with a Seetronic Powerkon A connector on one end and an Edison plug on the other end (U.S. market). If the power cable which came with the product has no plug, or if it is necessary to change the plug, use the table below to wire a plug.

Connection	Wire (U.S.)	Wire (Europe)	Screw Color
AC Live	Black	Brown	Yellow or Brass
AC Neutral	White	Blue	Silver
AC Ground	Green/Yellow	Green/Yellow	Green

Fuse Replacement

1. Disconnect this product from the power outlet.
2. Using a Phillips head screwdriver, unscrew the fuse holder cap from the housing.
3. Remove the blown fuse and replace with another fuse of the same type and rating (T2.5AL, 250V).
4. Screw the fuse holder cap back in place and reconnect power.

Power Linking

It is possible to power link COLORdash Bar 3 products. See the table below for the current draw at each voltage and frequency:

	100 V, 60 Hz	120 V, 60 Hz	208 V, 60 Hz	230 V, 50 Hz	240 V, 50 Hz
Current Draw	1.63 A	1.34 A	0.78 A	0.71 A	0.69 A
Resting	0.10 A	0.09 A	0.11 A	0.10 A	0.10 A

Never exceed 12 A on a single circuit. Power-linking cables can be purchased separately.

Signal Connections

DMX Linking

The COLORdash Bar 3 can be linked to a DMX controller using a 5-pin DMX connection. If using other DMX-compatible products with this product, it's possible to control each individually with a single DMX controller.

DMX Personalities

The COLORdash Bar 3 uses a 5-pin DMX data connection for its 8 DMX personalities, ranging from **6 Ch** to **59 Ch**.

- Refer to the Operation chapter to learn how to configure the COLORdash Bar 3 to work in these personalities.
- The Control Channel Assignments and Values section provides detailed information regarding the DMX personalities.

For information about DMX standards, Master/Slave connectivity, or the DMX cables needed to link this product to a DMX controller, download the DMX Primer from the Chauvet website: www.chauvetprofessional.com.

Remote Device Management

Remote Device Management, or RDM, is a standard for allowing DMX-enabled devices to communicate bi-directionally along existing DMX cabling. Check the DMX controller's User Manual or with the manufacturer as not all DMX controllers have this capability. The COLORdash Bar 3 supports RDM protocol that allows feedback to make changes to menu map options.

Master/Slave Connectivity

The Master/Slave mode allows an COLORdash Bar 3 (the master) to control one or more COLORdash Bar 3 products (the slaves) without a DMX controller. One COLORdash Bar 3 becomes the master when running an auto program or in Static mode.

Each slave's control panel must be configured to operate in Slave mode. During Master/Slave operation, the slaves will operate in unison with the master.

DO NOT connect a DMX controller to products operating in Master/Slave mode. The DMX controller signals may interfere with the signals from the master.

- **The Operation section of this manual provides detailed instructions on how to configure the master and slaves.**
- **For more information about DMX standards or the DMX cables needed to link this product to a DMX controller, download the DMX primer from the Chauvet website: www.chauvetprofessional.com.**

USB Software Update

The COLORdash Bar 3 allows for software updates with a USB device using the built-in USB port. To update the software using a USB flash drive, do the following:

1. Power on the product, and plug the flash drive into the USB port.
2. Go to the **Firmware Upgrade** main level and select **YES**.

If the selected file is incorrect, the upgrade will fail, and the display will go back to the main interface. Repeat steps 1–3 using the correct file.

3. If an upgrade file is detected, the upgrade will start. DO NOT turn off the power or disconnect the USB during the process. USB update can take several minutes to complete.
4. When the update is completed, the fixture will automatically reboot.
5. Go to Fixture Information on the product's menu map and confirm the firmware revision.
6. When the boot-up process is finished, restart the product.

- Place the .chl file in the root directory of the USB drive.
- The product's USB port supports up to 32GB capacity and only works with FAT32 file format.

Turning off the power, removing the USB, or not setting the fixture to the correct protocol during the update can cause partial or total firmware failure in the targeted fixture(s). Please refer to Mounting section to fix firmware failure issues.

Mounting

Before mounting the product, read and follow the safety recommendations indicated in the Safety Notes.

Orientation

Always mount this product in a safe position, making sure there is adequate room for ventilation, configuration, and maintenance.

Rigging

Chauvet recommends using the following general guidelines when mounting this product.

- Before deciding on a location for the product, make sure there is easy access to the product for maintenance and programming purposes.
- Make sure that the structure and attachment points can support the weight before hanging the product (see the Technical Specifications for weight information).
- When mounting the product overhead, always use a safety cable. Mount the product securely to a rigging point, whether an elevated platform or a truss.
- When rigging the product onto a truss, use a mounting clamp of appropriate weight capacity.
- When power linking multiple products, mount the products close enough for power-linking cables to reach.
- The bracket adjustment knobs allow for directional adjustment when aiming the product to the desired angle. Only loosen or tighten the bracket knobs manually. Using tools could damage the knobs.

Procedure

The COLORdash Bar 3 comes with two Omega brackets. The user can directly attach a mounting clamp (sold separately) to each Omega bracket. Make sure the clamps are capable of supporting the weight of this product. For the Chauvet Professional line of mounting clamps, go to http://www.trusst.com/products.

Mounting Diagram

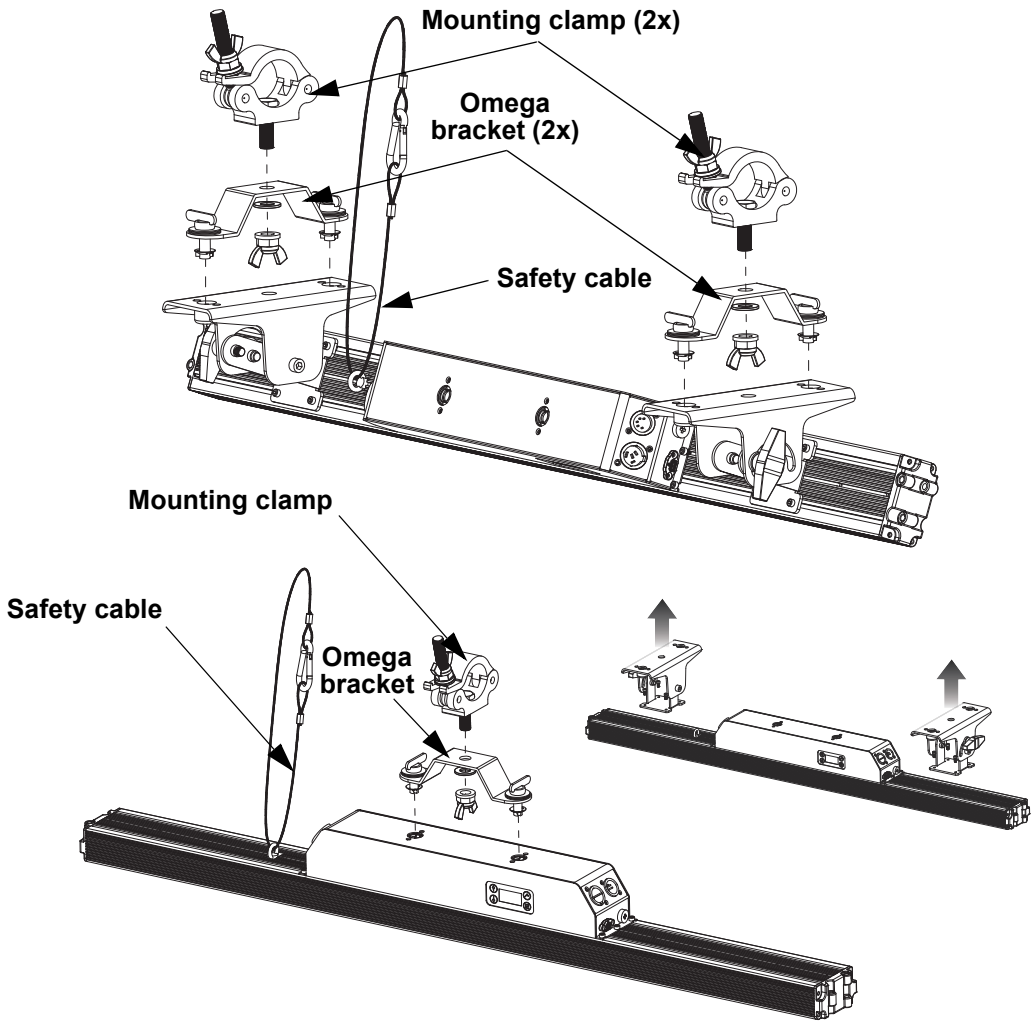

Aligning Multiple Fixtures

The COLORdash Bar 3 comes with integrated alignment hardware and alignment pins. To securely align multiple fixtures, follow the instructions below.

1. Connect the ends of two or more fixtures, ensuring the integrated alignment hardware is securely interlocked.

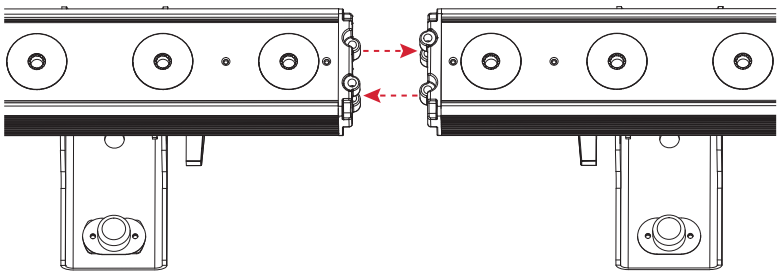

2. Press and hold the button on the back of each alignment pin, then insert them through the openings in the integrated alignment hardware.

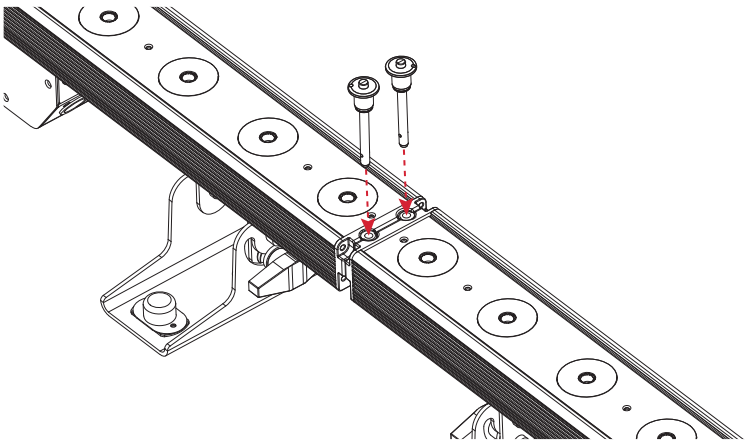

3. Release the alignment pin buttons and ensure the connection is secure.

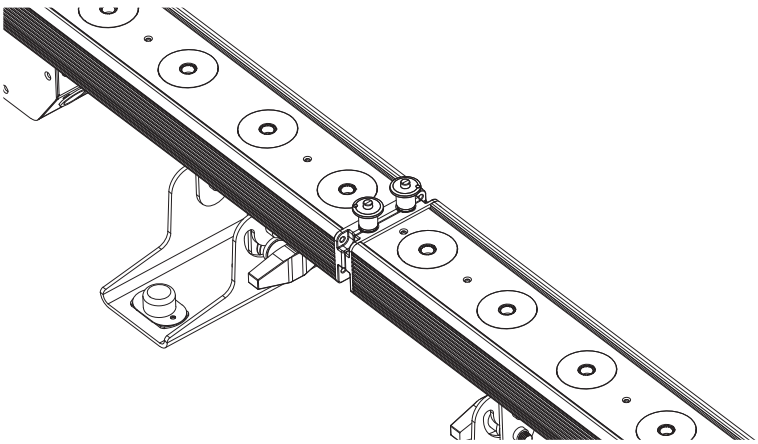

4. Operation

Control Panel Description

Button	Name	Function
	<Menu>	Exits the current menu or function
	<Enter>	Enables the currently displayed menu or sets a selected value into a function
	<Up>	Navigates upwards through the menu or increases the numeric value of a function
	<Down>	Navigates downwards through the menu or decreases the numeric value of a function

Control Options

Set the COLORdash Bar 3 starting address in the **001-507** DMX range. This enables control of up to 85 products in the **6CH** personality.

Programming

Refer to the menu map to understand the menu options. The menu map shows the main menu and a variable number of programming levels for each option.

- To access the main menu, press **<MENU>**.
- To navigate to the desired option in the main menu, press **<MENU>** repeatedly until the option is indicated, or use **<UP>** or **<DOWN>** to navigate directly.
- Press **<ENTER>** to select the indicated option.
- Use **<UP>** or **<DOWN>** to navigate within a programming level until the desired option is indicated.
- To return to the main menu, press **<MENU>** repeatedly until it shows on the display.

Passcode

When prompted, enter the following passcode: **<UP>**, **<DOWN>**, **<UP>**, **<DOWN>**, **<ENTER>**.
It is not possible to change this passcode.

Menu Map

Refer to the COLORdash Bar 3 product page on www.chauvetprofessional.com for the latest menu map.

Main Level	Programming Levels		Description
DMX Address	**001–507**		Selects DMX address (highest channel restricted to personality chosen)
DMX Channel	**6CH**		6-channel: RGBAWUV
	8CH		8-channel: Dimmer, RGBAWUV, strobe
	9CH		9-channel: Dimmer, 16-bit dimmer, RGBAWUV, strobe
	13CH		13-channel: Dimmer, RGBAWUV, strobe, color macro, color temperature, auto programs, auto speed, dimmer speed
	14CH		14-channel: Dimmer, 16-bit dimmer, RGBAWUV, strobe, color macro, color temperature, auto programs, auto speed, dimmer speed
	42CH		42-channel: Dimmer, 16-bit dimmer, RGB 1–12, AWUV, strobe
	47CH		47-channel: Dimmer, 16-bit dimmer, RGB 1–12, AWUV, strobe, color macro, color temperature, auto programs, auto speed, dimmer speed
	59CH		59-channel: Dimmer, 16-bit dimmer, RGB 1–12, strobe 1–12, AWUV, strobe, color macro, color temperature, auto programs, auto speed, dimmer speed
Static	**Fixed Color**	**R**	Red
		G	Green
		B	Blue
		A	Amber
		W	White
		UV	Ultraviolet
		RG	Red and green
		RB	Red and blue
		RA	Red and amber
		RW	Red and white
		RUV	Red and ultraviolet
		GB	Green and blue
		GA	Green and amber
		GW	Green and white
		GUV	Green and ultraviolet
		BA	Blue and amber
		BW	Blue and white
		BUV	Blue and ultraviolet
		AW	Amber and white
		AUV	Amber and ultraviolet
		WUV	White and ultraviolet
		RGB	Red, green, and blue
		RGA	Red, green, and amber
		RGW	Red, green, and white
		RGUV	Red, green, and ultraviolet
		RBA	Red, blue, and amber
		RBW	Red, blue, and white
		RBUV	Red, blue, and ultraviolet
		RAW	Red, amber, and white
		RAUV	Red, amber, and ultraviolet

Main Level	Programming Levels			Description
Static (cont.)	Fixed Color (cont.)	RWUV		Red, white, and ultraviolet
		GBA		Green, blue, and amber
		GBW		Green, blue, and white
		GBUV		Green, blue, and ultraviolet
		GAW		Green, amber, and white
		GAUV		Green, amber, and ultraviolet
		GWUV		Green, white, and ultraviolet
		BAW		Blue, amber, and white
		BAUV		Blue, amber, and ultraviolet
		BWUV		Blue, white, and ultraviolet
		AWUV		Amber, white, and ultraviolet
		RGBA		Red, green, blue, and amber
		RGBW		Red, green, blue, and white
		RGBUV		Red, green, blue, and ultraviolet
		RGAW		Red, green, amber, and white
		RGAUV		Red, green, amber, and ultraviolet
		RGWUV		Red, green, white, and ultraviolet
		RBAW		Red, blue, amber, and white
		RBAUV		Red, blue, amber, and ultraviolet
		RBWUV		Red, blue, white, and ultraviolet
		RAWUV		Red, amber, white, and ultraviolet
		GBAW		Green, blue, amber, and white
		GBAUV		Green, blue, amber, and ultraviolet
		GBWUV		Green, blue, white, and ultraviolet
		GAWUV		Green, amber, white, and ultraviolet
		BAWUV		Blue, amber, white, and ultraviolet
		RGBAW		Red, green, blue, amber, and white
		RGBAUV		Red, green, blue, amber, and ultraviolet
		RGBWUV		Red, green, blue, white, and ultraviolet
		RGAWUV		Red, green, amber, white, and ultraviolet
		RBAWUV		Red, blue, amber, white, and ultraviolet
		GBAWUV		Green, blue, amber, white, and ultraviolet
		RGBAWUV		Red, green, blue, amber. white, and ultraviolet
	Color Temperature	Warm White 1		Preset white color temperatures
		Warm White 2		
		Warm White 3		
		Neutral White 1		
		Neutral White 2		
		Neutral White 3		
		Daylight 1		
		Daylight 2		
		Daylight 3		
		Daylight 4		
	Manual Color Mixer	Red	000–255	Combine red, green, blue, amber, white, and UV to make a custom color temperature
		Green		
		Blue		
		Amber		
		White		
		UV		

Main Level	Programming Levels			Description
Auto Show	**Auto 1–5**	**001–100**		Selects automatic programs and program speed
Master/Slave	**Master**			DMX mode (Master)
	Slave			Slave mode
Dimmer Mode	**Off**			Linear dimmer
	Dimmer 1–3			Dimming curves **Dimmer 1** (fast) to **Dimmer 3** (slow)
White Balance	**Off**			Uses factory default white setting
	Manual	**Red**	**125–255**	Sets red LED maximum value
		Green		Sets green LED maximum value
		Blue		Sets blue LED maximum value
		Amber		Sets amber LED maximum value
		White		Sets white LED maximum value
		UV		Sets UV LED maximum value
LED Frequency	**600Hz**			Sets the PWM frequency
	1200Hz			
	2000Hz			
	4000Hz			
	6000Hz			
	25KHz			
Cell Order	**Left to Right**			Set the starting point for cells
	Right to Left			
Back Light	**10S**			Turns off display backlight after 10 seconds of inactivity
	30S			Turns off display backlight after 30 seconds of inactivity
	2Min			Turns off display backlight after 2 minutes of inactivity
	Always On			Display backlight always on
Key Lock	**On**			Locks display (password is **<UP>**, **<DOWN>**, **<UP>**, **<DOWN>**, **<ENTER>**)
	Off			
Information	**Fixture Hours**	**<_ _ _ _H>**		Shows total hours the product has been powered on
	Version	**<V_._>**		Shows current firmware version
	UID	**<_ _ _ _ _ _>**		Shows product UID
Factory Reset	**No**			Resets the product to factory default settings
	Yes			
System Upgrade	**No**			Update firmware via USB
	Yes			

DMX Configuration

Use control configurations to operate the product with a DMX controller.

DMX Personalities

To set the DMX personality:

1. Go to the **DMX Channel** main level.
2. Select the desired personality, from **6CH**, **8CH**, **9CH**, **13CH**, **14CH**, **42CH**, **47CH**, or **59CH**.

- See the Starting Address section for the highest selectable starting address for each personality.
- Make sure that the starting addresses on the various products do not overlap due to the new personality setting.

Starting Address

Each product will respond to a unique starting address from the controller. All products with the same starting address will respond in unison. To set the starting address in DMX mode:

1. Go to the **DMX Address** main level.
2. Select the starting address (**001–512**).

Personality	Highest Address	Products per Universe
6CH	**507**	**85**
8CH	**505**	**64**
9CH	**504**	**56**
13CH	**500**	**39**
14CH	**499**	**36**
42CH	**471**	**12**
47CH	**466**	**10**
59CH	**454**	**8**

DMX Channel Assignments and Values

59CH / 47CH / 42CH

42	47	59	Function	Value	Percent/Setting
1	1	1	Dimmer	000 ⇔ 255	0–100%
2	2	2	Fine dimmer	000 ⇔ 255	0–100%
3	3	3	Red 1	000 ⇔ 255	0–100%
4	4	4	Green 1	000 ⇔ 255	0–100%
5	5	5	Blue 1	000 ⇔ 255	0–100%
–	–	6	Strobe 1	000 ⇔ 010	No function
				011 ⇔ 255	Strobe, slow to fast
6	6	7	Red 2	000 ⇔ 255	0–100%
7	7	8	Green 2	000 ⇔ 255	0–100%
8	8	9	Blue 2	000 ⇔ 255	0–100%
–	–	10	Strobe 2	000 ⇔ 010	No function
				011 ⇔ 255	Strobe, slow to fast
9	9	11	Red 3	000 ⇔ 255	0–100%
10	10	12	Green 3	000 ⇔ 255	0–100%
11	11	13	Blue 3	000 ⇔ 010	0–100%
–	–	14	Strobe 3	000 ⇔ 010	No function
				011 ⇔ 255	Strobe, slow to fast
12	12	15	Red 4	000 ⇔ 255	0–100%
13	13	16	Green 4	000 ⇔ 255	0–100%
14	14	17	Blue 4	000 ⇔ 255	0–100%
–	–	18	Strobe 4	000 ⇔ 010	No function
				011 ⇔ 255	Strobe, slow to fast
15	15	19	Red 5	000 ⇔ 255	0–100%
16	16	20	Green 5	000 ⇔ 255	0–100%
17	17	21	Blue 5	000 ⇔ 255	0–100%
–	–	22	Strobe 5	000 ⇔ 010	No function
				011 ⇔ 255	Strobe, slow to fast
18	18	23	Red 6	000 ⇔ 255	0–100%
19	19	24	Green 6	000 ⇔ 255	0–100%
20	20	25	Blue 6	000 ⇔ 255	0–100%
–	–	26	Strobe 6	000 ⇔ 010	No function
				011 ⇔ 255	Strobe, slow to fast
21	21	27	Red 7	000 ⇔ 255	0–100%
22	22	28	Green 7	000 ⇔ 255	0–100%
23	23	29	Blue 7	000 ⇔ 255	0–100%
–	–	30	Strobe 7	000 ⇔ 010	No function
				011 ⇔ 255	Strobe, slow to fast
24	24	31	Red 8	000 ⇔ 255	0–100%
25	25	32	Green 8	000 ⇔ 255	0–100%
26	26	33	Blue 8	000 ⇔ 255	0–100%
–	–	34	Strobe 8	000 ⇔ 010	No function
				011 ⇔ 255	Strobe, slow to fast
27	27	35	Red 9	000 ⇔ 255	0–100%
28	28	36	Green 9	000 ⇔ 255	0–100%

42	47	59	Function	Value	Percent/Setting
29	**29**	**37**	**Blue 9**	000 ⇔ 255	0–100%
–	**–**	**38**	**Strobe 9**	000 ⇔ 010	No function
				011 ⇔ 255	Strobe, slow to fast
30	**30**	**39**	**Red 10**	000 ⇔ 255	0–100%
31	**31**	**40**	**Green 10**	000 ⇔ 255	0–100%
32	**32**	**41**	**Blue 10**	000 ⇔ 255	0–100%
–	**–**	**42**	**Strobe 10**	000 ⇔ 010	No function
				011 ⇔ 255	Strobe, slow to fast
33	**33**	**43**	**Red 11**	000 ⇔ 255	0–100%
34	**34**	**44**	**Green 11**	000 ⇔ 255	0–100%
35	**35**	**45**	**Blue 11**	000 ⇔ 255	0–100%
–	**–**	**46**	**Strobe 11**	000 ⇔ 010	No function
				011 ⇔ 255	Strobe, slow to fast
36	**36**	**47**	**Red 12**	000 ⇔ 255	0–100%
37	**37**	**48**	**Green 12**	000 ⇔ 255	0–100%
38	**38**	**49**	**Blue 12**	000 ⇔ 255	0–100%
–	**–**	**50**	**Strobe 12**	000 ⇔ 010	No function
				011 ⇔ 255	Strobe, slow to fast
39	**39**	**51**	**Amber**	000 ⇔ 255	0–100%
40	**40**	**52**	**White**	000 ⇔ 255	0–100%
41	**41**	**53**	**UV**	000 ⇔ 255	0–100%
42	**42**	**54**	**Strobe**	000 ⇔ 010	No function
				011 ⇔ 255	Strobe, slow to fast
–	**43**	**55**	**Color macro**	000 ⇔ 010	No function
				011 ⇔ 030	Color 1
				031 ⇔ 050	Color 2
				051 ⇔ 070	Color 3
				071 ⇔ 090	Color 4
				091 ⇔ 110	Color 5
				111 ⇔ 130	Color 6
				131 ⇔ 150	Color 7
				151 ⇔ 170	Color 8
				171 ⇔ 200	Color 9
				201 ⇔ 205	Color 10
				206 ⇔ 210	Color 11
				211 ⇔ 215	Color 12
				216 ⇔ 220	Color 13
				221 ⇔ 225	Color 14
				226 ⇔ 230	Color 15
				231 ⇔ 235	Color 16
				236 ⇔ 240	Color 17
				241 ⇔ 245	Color 18
				246 ⇔ 250	Color 19
				251 ⇔ 255	Color 20

42	47	59	Function	Value	Percent/Setting
–	44	56	**Color temperature**	000 ⇔ 005	No function
				006 ⇔ 025	Warm white 1
				026 ⇔ 050	Warm white 2
				051 ⇔ 075	Warm white 3
				076 ⇔ 100	Neutral white 1
				101 ⇔ 125	Neutral white 2
				126 ⇔ 150	Neutral white 3
				151 ⇔ 175	Daylight 1
				176 ⇔ 200	Daylight 2
				201 ⇔ 225	Daylight 3
				226 ⇔ 250	Daylight 4
				251 ⇔ 255	No function
–	45	57	**Auto programs**	000 ⇔ 010	No function
				011 ⇔ 060	Auto program 1
				061 ⇔ 110	Auto program 2
				111 ⇔ 160	Auto program 3
				161 ⇔ 210	Auto program 4
				211 ⇔ 255	Auto program 5 (auto programs 1–4)
–	46	58	**Auto speed**	000 ⇔ 255	0–100%
–	47	59	**Dimmer speed**	000 ⇔ 051	Preset dimmer speed from display menu
				052 ⇔ 101	Off
				102 ⇔ 152	Dimmer speed 1 (fast)
				153 ⇔ 203	Dimmer speed 2 (moderate)
				204 ⇔ 255	Dimmer speed 3 (slow)

14CH / 13CH / 9CH / 8CH / 6CH

6	8	9	13	14	Function	Value	Percent/Setting
–	1	1	1	1	**Dimmer**	000 ⇔ 255	0–100%
–	–	2	–	2	**Fine dimmer**	000 ⇔ 255	0–100%
1	2	3	2	3	**Red**	000 ⇔ 255	0–100%
2	3	4	3	4	**Green**	000 ⇔ 255	0–100%
3	4	5	4	5	**Blue**	000 ⇔ 255	0–100%
4	5	6	5	6	**Amber**	000 ⇔ 255	0–100%
5	6	7	6	7	**White**	000 ⇔ 255	0–100%
6	7	8	7	8	**UV**	000 ⇔ 255	0–100%
–	8	9	8	9	**Strobe**	000 ⇔ 010	No function
						011 ⇔ 255	Strobe, slow to fast
–	–	–	9	10	**Color macro**	000 ⇔ 010	No function
						011 ⇔ 030	Color 1
						031 ⇔ 050	Color 2
						051 ⇔ 070	Color 3
						071 ⇔ 090	Color 4
						091 ⇔ 110	Color 5
						111 ⇔ 130	Color 6
						131 ⇔ 150	Color 7
						151 ⇔ 170	Color 8
						171 ⇔ 200	Color 9
						201 ⇔ 205	Color 10
						206 ⇔ 210	Color 11
						211 ⇔ 215	Color 12
						216 ⇔ 220	Color 13
						221 ⇔ 225	Color 14
						226 ⇔ 230	Color 15
						231 ⇔ 235	Color 16
						236 ⇔ 240	Color 17
						241 ⇔ 245	Color 18
						246 ⇔ 250	Color 19
						251 ⇔ 255	Color 20
–	–	–	10	11	**Color temperature**	000 ⇔ 005	No function
						006 ⇔ 025	Warm white 1
						026 ⇔ 050	Warm white 2
						051 ⇔ 075	Warm white 3
						076 ⇔ 100	Neutral white 1
						101 ⇔ 125	Neutral white 2
						126 ⇔ 150	Neutral white 3
						151 ⇔ 175	Daylight 1
						176 ⇔ 200	Daylight 2
						201 ⇔ 225	Daylight 3
						226 ⇔ 250	Daylight 4
						251 ⇔ 255	No function

6	8	9	13	14	Function	Value	Percent/Setting
–	–	–	11	12	**Auto programs**	000 ⇔ 010	No function
						011 ⇔ 060	Auto program 1
						061 ⇔ 110	Auto program 2
						111 ⇔ 160	Auto program 3
						161 ⇔ 210	Auto program 4
						211 ⇔ 255	Auto program 5 (auto programs 1–4)
–	–	–	12	13	**Auto speed**	000 ⇔ 010	0–100%
–	–	–	13	14	**Dimmer speed**	000 ⇔ 051	Preset dimmer speed from display menu
						052 ⇔ 101	Off
						102 ⇔ 152	Dimmer speed 1 (fast)
						153 ⇔ 203	Dimmer speed 2 (moderate)
						204 ⇔ 255	Dimmer speed 3 (slow)

Standalone Configuration

Static Mode

The static mode options under **Static** also include preset color temperatures and a manual color mixer.

Fixed Color

To select from preset fixed colors:

1. Go to the **Static** main level.
2. Select the **Fixed Color** option.
3. Select a static color from **R**, **G**, **B**, **A**, **W**, **UV**, **RG**, **RB**, **RA**, **RW**, **RUV**, **GB**, **GA**, **GW**, **GUV**, **BA**, **BW**, **BUV**, **AW**, **AUV**, **WUV**, **RGB**, **RGA**, **RGW**, **RGUV**, **RBA**, **RBW**, **RBUV**, **RAW**, **RAUV**, **RWUV**, **GBA**, **GBW**, **GBUV**, **GAW**, **GAUV**, **GWUV**, **BAW**, **BAUV**, **BWUV**, **AWUV**, **RGBA**, **RGBW**, **RGBUV**, **RGAW**, **RGAUV**, **RGWUV**, **RBAW**, **RBAUV**, **RBWUV**, **RAWUV**, **GBAW**, **GBAUV**, **GBWUV**, **GAWUV**, **GAWUV**, **BAWUV**, **RGBAW**, **RGBAUV**, **RGBWUV**, **RGAWUV**, **RBAWUV**, or **RGBAWUV**.

Color Temperature

To select a preset color temperature via the menu map:

1. Go to the **Static** main level.
2. Select the **Color Temperature** option.
3. Select the desired color temperature from **Warm White 1**, **Warm White 2**, **Warm White 3**, **Neutral White 1**, **Neutral White 2**, **Neutral White 3**, **Daylight 1**, **Daylight 2**, **Daylight 3**, or **Daylight 4**.

Manual Color Mixer

To manually mix a custom static color:

1. Go to the **Static** main level.
2. Select **Manual Color Mixer**.
3. Select the color to edit (**Red**, **Green**, **Blue**, **Amber**, **White**, or **UV**).
4. Set the value for the selected color (**0–255**).
5. Repeat steps 3 and 4 until product outputs as desired.

Auto Show

To select an automatic program:

1. Go to the **Auto Show** main level.
2. Select the desired auto program (**Auto 1–5**).
3. Set the **Speed** value (**1–100**).

Settings Configuration

Master/Slave

To set the COLORdash Bar 3 product to master or slave mode:

1. Go to the **Master/Slave** main level.
2. Select from **Master** (sends control signal) or **Slave** (receives control signal).

- **Configure all the slave products before connecting the master to the daisy chain.**
- **Never connect a DMX controller to a DMX string configured for Master/Slave operation because the controller may interfere with the signals from the master.**
- **Do not connect more than 31 slaves to the master.**

Dimmer Speed Mode

To set the dimmer speed:

1. Go to the **Dimmer Mode** main level.
2. Select the dimmer speed mode from **Off** (instant), **Dimmer 1** (fastest), **Dimmer 2**, or **Dimmer 3** (slowest).

White Balance

To set the maximum values of a given LED color to create a white light output:

1. Go to the **White Balance** main level.
2. Select the color to change (**Red**, **Green**, **Blue**, **Amber**, **White**, or **UV**).
3. Set the color value, **000–255**.

Cell Order

To change the starting point for cells on the COLORdash Bar 3:

1. Go to the **Cell Order** main level.
2. Select **Left to Right** or **Right to Left**.

LED Frequency

To set the frequency of the pulse width modulation:

1. Go to the **LED Frequency** main level.
2. Select the PWM frequency, from **750Hz**, **1200Hz**, **2000Hz**, **4000Hz**, **6000Hz**, or **25KHz**.

Display Backlight

To set how long the display will stay lit without activity:

1. Go to the **Back Light** main level.
2. Select from **10S** (10 seconds), **30S** (30 seconds), **2Min** (2 minutes), or **Always On**.

Key Lock

To enable or disable the passcode lock on the display:

1. Go to the **Key Lock** main level.
2. Select from **On** or **Off**.

Information

To view product information, such as the number of hours the product has been on, the driver firmware, etc., go to the **Information** main level.

Factory Reset

To reset the product to factory default settings:

1. Go to the **Factory Reset** main level.
2. Select **No** (do not reset) or **Yes** (reset).

5. Maintenance

Product Maintenance

Dust build-up reduces light output performance and can cause overheating. This can lead to reduction of the light source's life and/or mechanical wear. To maintain optimum performance and minimize wear, clean each lighting product at least twice a month. However, be aware that usage and environmental conditions could be contributing factors to increase the cleaning frequency.

To clean the product, follow the instructions below:

1. Unplug the product from power.
2. Wait until the product is at room temperature.
3. Use a vacuum (or dry compressed air) and a soft brush to remove dust collected on the external surface/vents.
4. Clean all transparent surfaces with a mild soap solution, ammonia-free glass cleaner, or isopropyl alcohol.
5. Apply the solution directly to a soft, lint free cotton cloth or a lens cleaning tissue.
6. Softly drag any dirt or grime to the outside of the transparent surface.
7. Gently polish the transparent surfaces until they are free of haze and lint.

Always dry the transparent surfaces carefully after cleaning them.

6. Technical Specifications

Dimensions and Weight

Length	Width	Height	Weight
39.37 in (1000 mm)	2.99 in (76 mm)	5.62 in (143 mm)	11.4 lb (5.2 kg)

Note: Dimensions in inches are rounded.

Power

Power Supply Type	Range	Voltage Selection
Switching (internal)	100 to 240 VAC, 50/60 Hz	Auto-ranging

Parameter	100 V, 60 Hz	120 V, 60 Hz	208 V, 60 Hz	230 V, 50 Hz	240 V, 50 Hz
Consumption	163 W	160 W	158 W	157 W	157 W
Operating Current	1.63 A	1.34 A	0.78 A	0.71 A	0.69 A
Resting Current	0.10 A	0.09 A	0.11 A	0.10 A	0.10 A
Power Linking Current	12 A	12 A	12 A	12 A	12 A
Fuse	T2.5AL , 250V	T2.5AL , 250V	T2.5AL , 250V	T2.5AL , 250V	T2.5AL , 250V

Power I/O	U.S./Worldwide	UK/Europe
Power Input Connector	Seetronic Powerkon IP65	Seetronic Powerkon IP65
Power Output Connector	Seetronic Powerkon IP65	Seetronic Powerkon IP65
Power Cable plug	Edison	Local plug

Light Source

Type	Color	Quantity	Lifespan
LED	RGBWA+UV	12	50,000 hours

Photometrics

Color Temperature at Full	Beam Angle	Field Angle	Illuminance @ 5 m	Lumens
19,550 K	20.7°	39°	1230 lux	5219

Thermal

Maximum External Temperature	Cooling System
113 °F (45 °C)	Convection

Control

DMX I/O Connector	Channel Range
5-pin XLR	6, 8, 9, 13, 14, 42, 47, or 59

Ordering

Product Name	Item Name	Item Code	UPC Number
COLORdash Bar 3	COLORDASHBAR3	10032757	781462231057

UL 1573
CSA C22.2 No. 166
E113093

Contact Us

General Information	Technical Support
Chauvet World Headquarters	
Address: 3360 Davie Rd., Suite 509 Davie, FL 33314 Voice: (954) 577-4455 Fax: (954) 929-5560 Toll Free: (800) 762-1084	Voice: (844) 393-7575 Fax: (954) 756-8015 Email: chauvetcs@chauvetlighting.com Website: www.chauvetprofessional.com
Chauvet U.K.	
Address: Pod 1 EVO Park Little Oak Drive, Sherwood Park Nottinghamshire, NG15 0EB UK Voice: +44 (0) 1773 511115 Fax: +44 (0) 1773 511110	Email: UKtech@chauvetlighting.eu Website: www.chauvetprofessional.eu
Chauvet Benelux	
Address: Vaartlaan 9 9800 Deinze Belgium Voice: +32 9 388 93 97	Email: BNLtech@chauvetlighting.eu Website: www.chauvetprofessional.eu
Chauvet France	
Address: 3, Rue Ampère 91380 Chilly-Mazarin France Voice: +33 1 78 85 33 59	Email: FRtech@chauvetlighting.fr Website: www.chauvetprofessional.eu
Chauvet Germany	
Address: Bruno-Bürgel-Str. 11 28759 Bremen Germany Voice: +49 421 62 60 20	Email: DEtech@chauvetlighting.de Website: www.chauvetprofessional.eu
Chauvet Mexico	
Address: Av. de las Partidas 34 - 3B (Entrance by Calle 2) Zona Industrial Lerma Lerma, Edo. de México, CP 52000 Voice: +52 (728) 690-2010	Email: servicio@chauvet.com.mx Website: www.chauvetprofessional.mx

Warranty & Returns

For warranty terms and conditions and return information, please visit our website.

For customers in the United States and Mexico: www.chauvetlighting.com/warranty-registration.

For customers in the United Kingdom, Republic of Ireland, Belgium, the Netherlands, Luxembourg, France, and Germany: www.chauvetlighting.eu/warranty-registration.