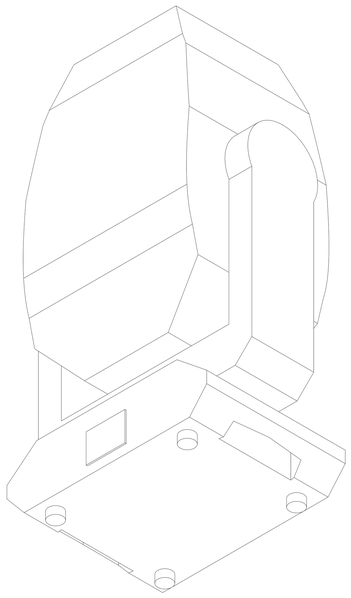

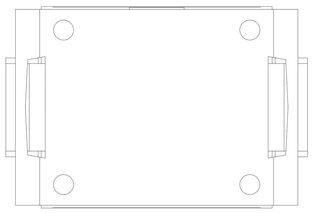

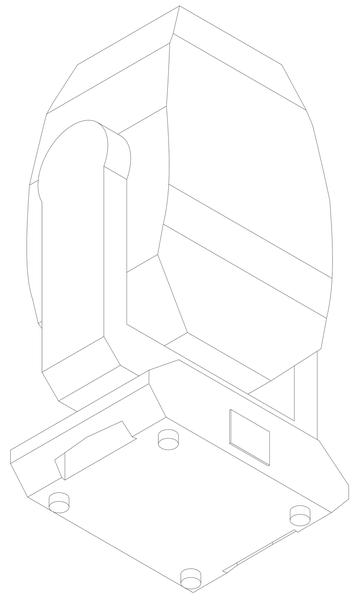

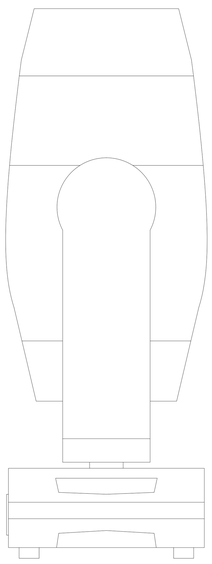

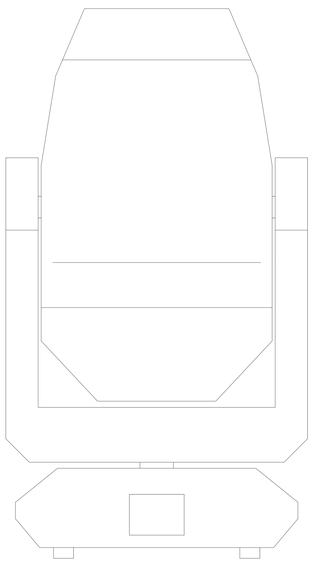

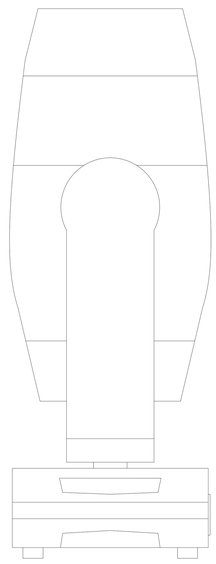

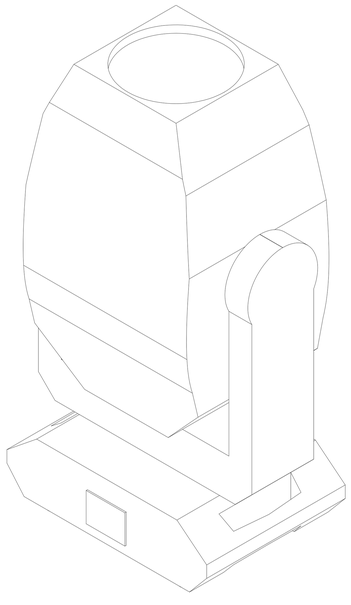

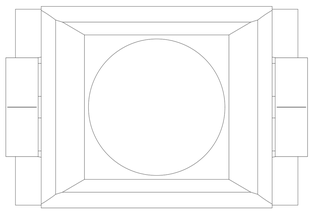

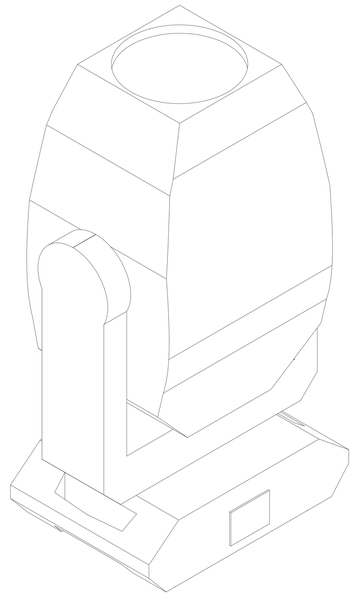

DRAWN C. Henry	DATE 8/21/2025	TITLE Maverick Force X Spot

© Chauvet & Sons, LLC (2025)
All Product specifications and dimensions are subject to change without notice.

SCALE: 0.1 S

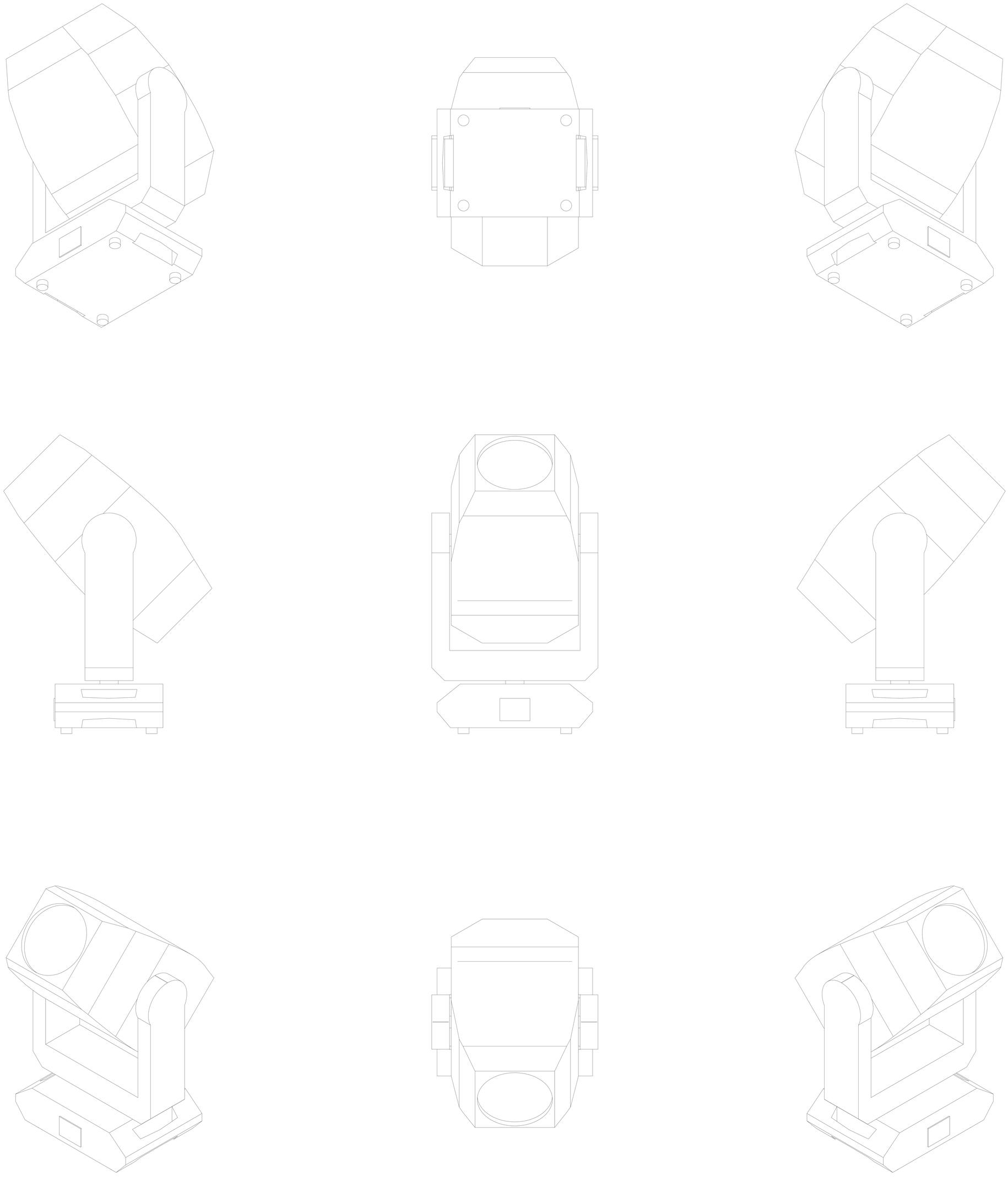

DRAWN: C. Henry
DATE: 6/13/2025
TITLE: Maverick Force X Spot

© Chauvet & Sons, LLC (2025)
All Product specifications and dimensions are subject to change without notice.

SCALE: 1 : 1

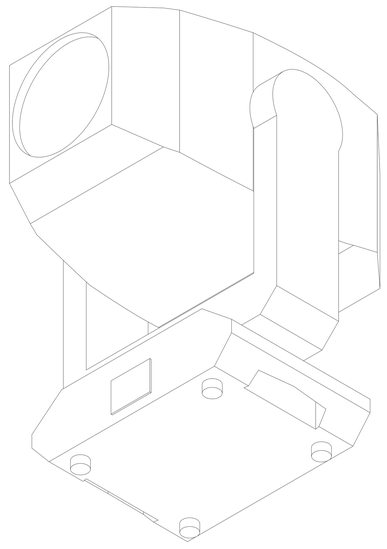

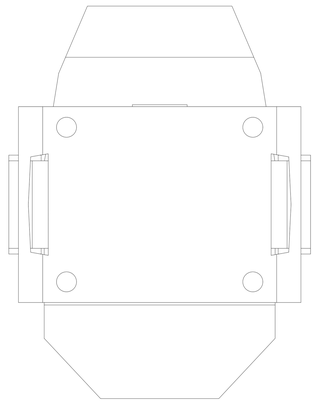

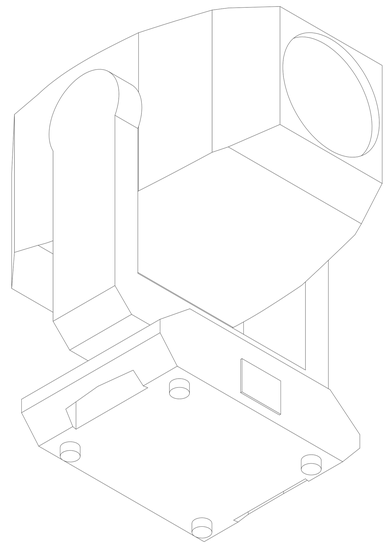

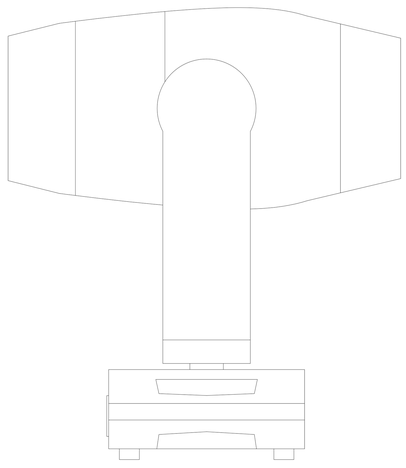

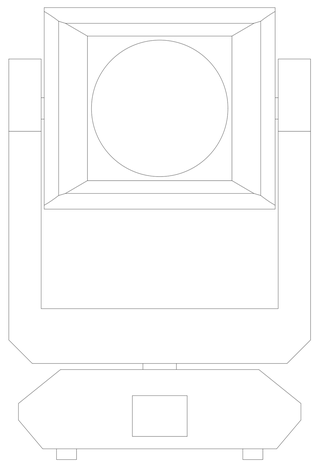

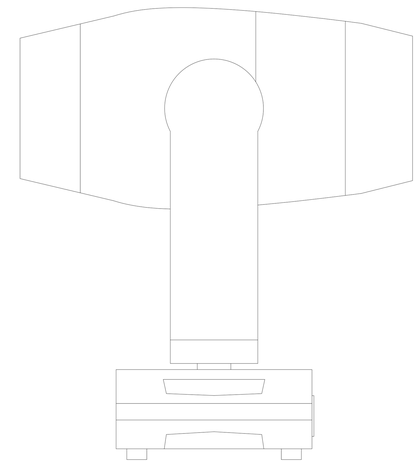

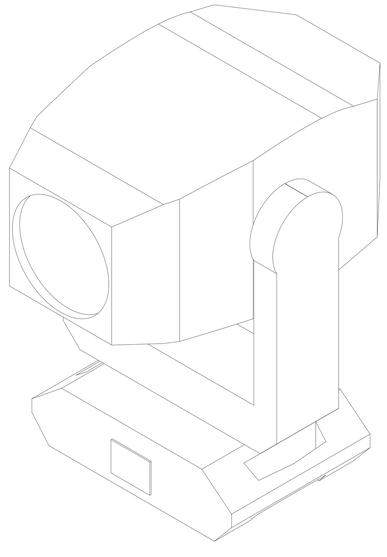

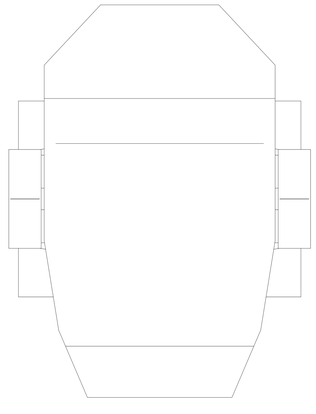

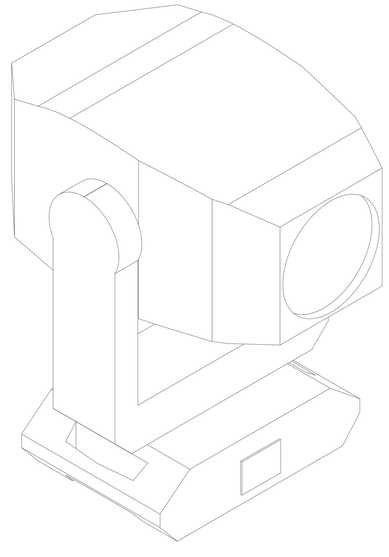

DRAWN C. Henry	DATE 9/17/2025	TITLE Maverick Force X Spot

© Chauvet & Sons, LLC (2025)
All Product specifications and dimensions are subject to change without notice

CHAUVET PROFESSIONAL

SCALE 1 : 1