ÉPIX

D4IP

User Manual

Model ID: EPIXD4IP

CHAUVET PROFESSIONAL

Edition Notes

The ÉPIX D4 IP User Manual includes a description, safety precautions, installation, programming, operation, and maintenance instructions for the ÉPIX D4 IP as of the release date of this edition.

Trademarks

Chauvet, Chauvet Professional, the Chauvet logo, ÉPIX, and ÉPIX LINE are registered trademarks or trademarks of Chauvet & Sons, LLC (d/b/a Chauvet and Chauvet Lighting) in the United States and other countries. Other company and product names and logos referred to herein may be trademarks of their respective companies.

Copyright Notice

The works of authorship contained in this manual, including, but not limited to, all designs, text, and images are owned by Chauvet.

© Copyright 2026 Chauvet & Sons, LLC. All rights reserved.

Electronically published by Chauvet in the United States of America.

Manual Use

Chauvet authorizes its customers to download and print this manual for professional information purposes only. Chauvet expressly prohibits the usage, copy, storage, distribution, modification, or printing of this manual or its content for any other purpose without written consent from Chauvet.

Document Printing

For best results, print this document in color, on letter size paper (8.5 x 11 in), double-sided. If using A4 paper (210 x 297 mm), configure the printer to scale the content accordingly.

Intended Audience

Any person installing, operating, and/or maintaining this product should completely read through the guide that shipped with the product, as well as this manual, before installing, operating, or maintaining this product.

Disclaimer

Chauvet believes that the information contained in this manual is accurate in all respects. However, Chauvet assumes no responsibility and specifically disclaims any and all liability to any party for any loss, damage, or disruption caused by any errors or omissions in this document, whether such errors or omissions result from negligence, accident, or any other cause. Chauvet reserves the right to revise the content of this document without any obligation to notify any person or company of such revision. However, Chauvet has no obligation to make, and does not commit to make, any such revisions.

Document Revision

Go to www.chauvetprofessional.com for the latest version.

Revision	Date	Description
2	05/2026	Updated drawings, dimensions, weight, and power specifications.

TABLE OF CONTENTS

1. Before You Begin 1
- What Is Included 1
- Claims 1
- Text Conventions 1
- Symbols 1
- Safety Notes 2
- FCC Statement of Compliance 3
- Expected LED Lifespan 3

2. Introduction 4
- Features 4
- Product Overview 4
- Product Dimensions 5

3. Setup 6
- AC Power 6
  - AC Plug 6
  - Power Linking 6
- ÉPIX LINE Product Linking 6
- Signal Connections 7
  - Control Personalities 7
  - KLSTR Connection 7
  - Art-Net™ Connection 7
    - Remote Device Management 7
  - sACN Connection 7
  - RSTP Connection 7
  - Ethernet Connection Diagram 7
- Mounting 8
  - Orientation 8
  - Rigging 8
  - Procedure 8
- Rack Ears 8

4. Operation 9
- Control Panel Description 9
- Control Options 9
- Programming with a PC 9
- Programming with the Display 9
- Home Screen 9
- Menu Map 10
- Home Screens 12
  - Port State Screen 12
  - Control Mode Screen 12
  - Product Info Screen 12
  - Toggle Identify Screen 13
  - Global Color Screen 13
- Control Configuration 13
  - eDMX Mode 13

eDMX Protocols 13
eDMX Mapping 13
Configuration Mode 13
Universe 14
Address 14
Dense Mapping 14
Saving eDMX Mapping Settings 14
eDMX Personality 15
Network Configuration 15
IP Address 15
Subnet Mask 15
Saving Network Settings 15
eDMX Channel Assignments and Values 16
Test Pattern 16
Effects Engine 16
Full Pixel Control 17
Groups of 5 Pixels 24
Groups of 10 Pixels 26
Groups of 25 Pixels 27
Groups of 50 Pixels 27
Standalone Configuration 27
Effects Engine 27
Test Patterns 27
Blackout 27
Settings Configuration 28
Output Control 28
Power Mode 28
Intensity 28
Dimming Curve 28
Port Control 28
Fixture ID 28
Display Settings 28
Backlight 28
Brightness 28
Invert Display 29
Information 29
Factory Reset 29
Error Codes 29
Critical Errors 29
Port Errors 29
5. Maintenance 30
Product Maintenance 30
Torque Measurements 30
Vacuum Test Measurements 30
6. Technical Specifications 31
Contact Us 32
Warranty & Returns 32

1. Before You Begin

What Is Included

- ÉPIX D4 IP
- Seetronic Powerkon IP65 power cable
- 2 rack ears with screws
- Omega bracket with mounting hardware
- Quick Reference Guide

Claims

Carefully unpack the product immediately and check the container to make sure all the parts are in the package and are in good condition.

If the box or the contents (the product and included accessories) appear damaged from shipping, or show signs of mishandling, notify the carrier immediately, not Chauvet. Failure to report damage to the carrier immediately may invalidate a claim. In addition, keep the box and contents for inspection.

For other issues, such as missing components or parts, damage not related to shipping, or concealed damage, file a claim with Chauvet within 7 days of delivery.

Text Conventions

Convention	Meaning
1–512	A range of values
50/60	A set of values of which only one can be chosen
Settings	A menu option not to be modified
<ENTER>	A key to be pressed on the product's control panel

Symbols

Symbol	Meaning
	Critical installation, configuration, or operation information. Not following these instructions may make the product not work, cause damage to the product, or cause harm to the operator.
	Important installation or configuration information. The product may not function correctly if this information is not used.
	Useful information.

Any reference to data or power connections in this manual assumes the use of Seetronic IP-rated cables.

Safety Notes

Read all the following safety notes before working with this product. These notes contain important information about the installation, usage, and maintenance of this product.

This product contains no user-serviceable parts. Any reference to servicing in this User Manual will only apply to properly trained, certified technicians. Do not open the housing or attempt any repairs.

All applicable local codes and regulations apply to proper installation of this product.

- The product is intended for professional use only.
- If the external flexible cable or cord of this product is damaged, it shall be replaced by a special cord or cord exclusively available from the manufacturer or its service agent.
- **CAUTION:**
  - This product's housing may be hot when operating. Mount this product in a location with adequate ventilation, at least 20 in (50 cm) from adjacent surfaces.
  - When transferring the product from extreme temperature environments, (e.g., cold truck to warm humid ballroom) condensation may form on the internal electronics of the product. To avoid causing a failure, allow the product to fully acclimate to the surrounding environment before connecting it to power.
- **ALWAYS:**
  - Disconnect from power before cleaning the product.
  - When using an IP65-rated product in an outdoor environment, use IP65- (or higher) rated power and data cable.
  - Replace and secure IP-rated protective covers to all power, data, USB, or other ports when not in use.
  - Use a safety cable when mounting this product overhead.
  - Connect this product to a grounded and protected circuit.
- **DO NOT:**
  - Open this product. It contains no user-serviceable parts.
  - Look at the light source when the product is on.
  - Leave any flammable material within 50 cm of this product while operating or connected to power.
  - Connect this product to a dimmer or rheostat.
  - Operate this product if the housing or cables appear damaged.
  - Submerge this product (adhere to standards for the published IP rating). Regular outdoor operation is fine.
  - Permanently install outdoors in locations with extreme environmental conditions. This includes, but is not limited to:
    - Exposure to a marine/saline environment (within 3 miles of a saltwater body of water).
    - Locations where normal temperatures exceed the temperature ranges in this manual.
    - Locations that are prone to flooding or being buried in snow.
    - Other areas where the product will be subject to extreme radiation or caustic substances.
- The maximum ambient temperature is 113 °F (45 °C). Do not operate this product at higher temperatures.
- The minimum ambient temperature is -4°F (-20°C). Do not operate the product at lower temperatures.
- To eliminate unnecessary wear and improve its lifespan, during periods of non-use completely disconnect the product from power via breaker or by unplugging it.
- In the event of a serious operating problem, stop using immediately.

If this Chauvet product requires service, contact Chauvet Technical Support.

FCC Statement of Compliance

This device complies with Part 15 Part B of the FCC rules. Operation is subject to the following two conditions:

1. This device may not cause harmful interference, and
2. This device must accept any interference received, including interference that may cause undesired operation.

This equipment has been tested and found to comply with the limits for a Class B digital device, pursuant to Part 15 of the FCC Rules. These limits are designed to provide reasonable protection against harmful interference in a residential installation. This equipment generates uses and can radiate radio frequency energy and, if not installed and used in accordance with the instructions, may cause harmful interference to radio communications. However, there is no guarantee that interference will not occur in a particular installation. If this equipment does cause harmful interference to radio or television reception, which can be determined by turning the equipment off and on, the user is encouraged to try to correct the interference by one or more of the following measures:

- Reorient or relocate the receiving antenna.
- Increase the separation between the equipment and receiver.
- Connect the equipment into an outlet on a circuit different from that to which the receiver is connected.
- Consult the dealer or an experienced radio/TV technician for help.

Any changes or modifications not expressly approved by the party responsible for compliance could void the user’s authority to operate the equipment.

Expected LED Lifespan

Over time, use and heat will gradually reduce LED brightness. Clustered LEDs produce more heat than single LEDs, contributing to shorter lifespans if always used at full intensity. The average LED lifespan is 40,000 to 50,000 hours. To extend LED lifespan, maintain proper ventilation around the product, and limit the overall intensity.

2. Introduction

Features

- Remote power supply and processing module for ÉPIX Line products
- Supports MVR with GDTF on-board, creating a seamless production flow from design to playback at the lighting desk
- Utilizes ÉPIX Mapping System to detect, configure, and control ÉPIX Line products
- Industrial design accommodates the rental/touring and Installation applications
- Supports RSTP with automatic signal backup

Product Overview

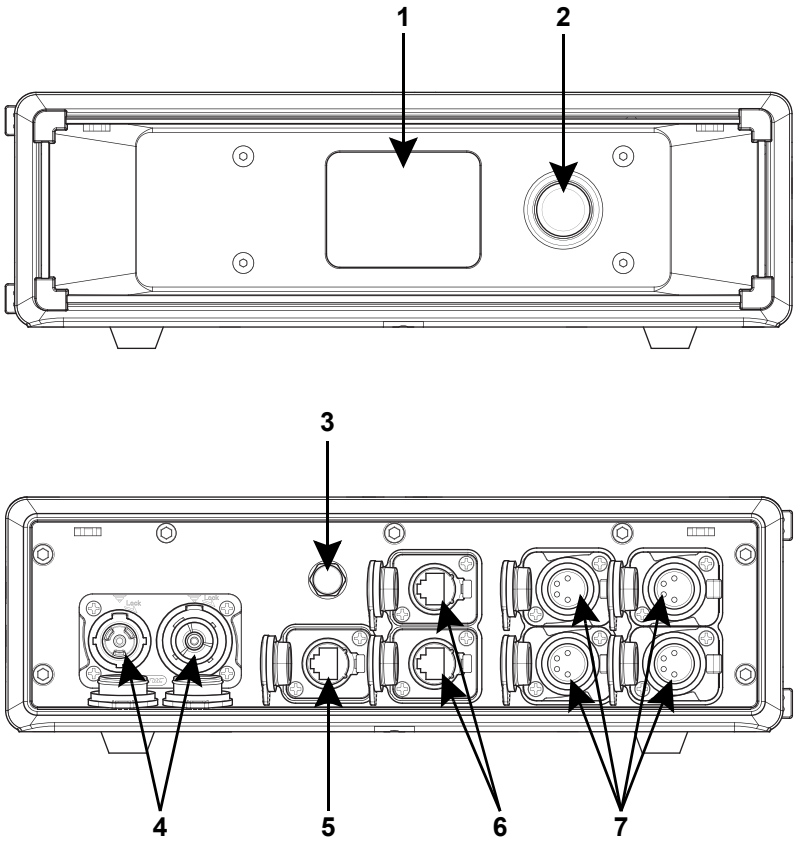

#	Name
1	Menu display
2	Menu encoder
3	GORE® valve
4	Power in/out
5	KLSTR.ctrl ethernet port
6	Ethernet ports A and B
7	ÉPIX Line outputs 1–4

Product Dimensions

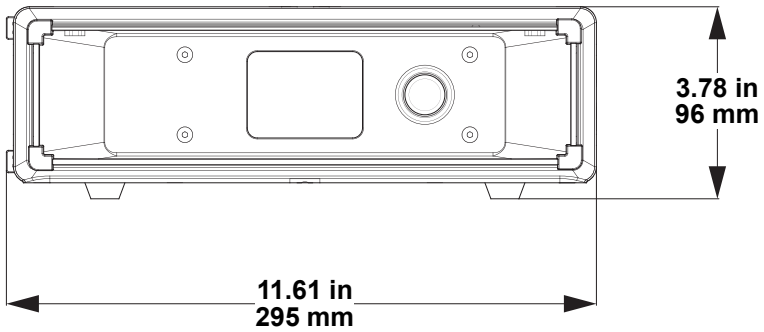

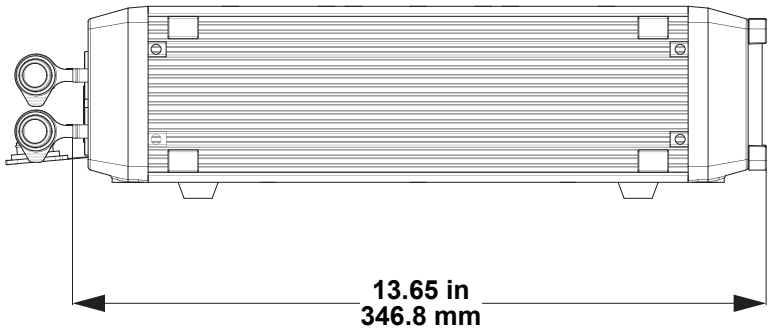

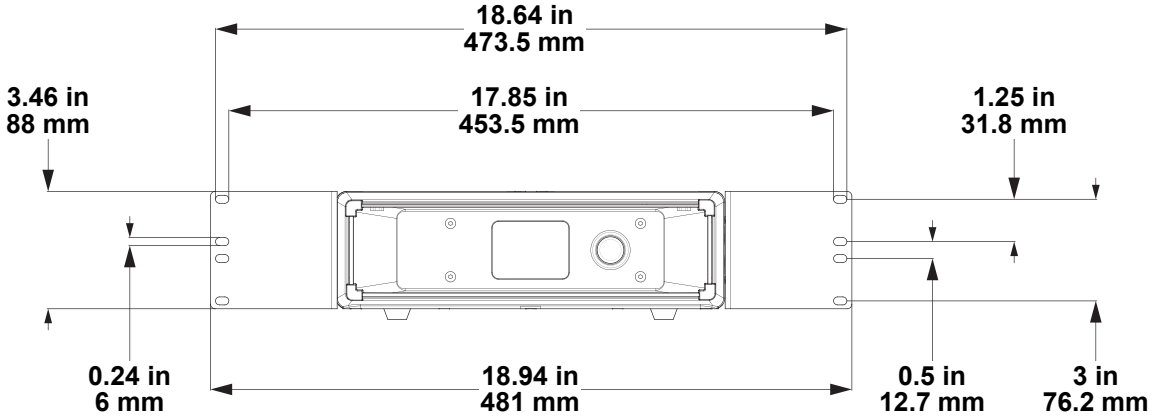

3. Setup

AC Power

The ÉPIX D4 IP has an auto-ranging power supply and it can work with an input voltage range of 100 to 240 VAC, 50/60 Hz.

To determine the product's power requirements (circuit breaker, power outlet, and wiring), use the current value listed on the label affixed to the product's back panel, or refer to the product's specifications chart. The listed current rating indicates the product's average current draw under normal conditions.

- **Always connect the product to a protected circuit (a circuit breaker or fuse). Ensure the product has an appropriate electrical ground to avoid the risk of electrocution or fire.**
- **To eliminate unnecessary wear and improve its lifespan, during periods of non-use completely disconnect the product from power via breaker or by unplugging it.**

Never connect the product to a rheostat (variable resistor) or dimmer circuit, even if the rheostat or dimmer channel serves only as a 0 to 100% switch.

AC Plug

The ÉPIX D4 IP comes with a power input cable terminated with a Seetronic Powerkon A connector on one end and an Edison plug on the other end (U.S. market). If the power cable which came with the product has no plug, or if it is necessary to change the plug, use the table below to wire a plug.

Connection	Wire (U.S.)	Wire (Europe)	Screw Color
AC Live	Black	Brown	Yellow or Brass
AC Neutral	White	Blue	Silver
AC Ground	Green/Yellow	Green/Yellow	Green

Power Linking

It is possible to power link ÉPIX D4 IP products. See the table below for the current draw at each voltage and frequency:

	100 V, 60 Hz	120 V, 60 Hz	208 V, 60 Hz	230 V, 50 Hz	240 V, 50 Hz
Current Draw	11.08 A	9.07 A	5.15 A	4.69 A	4.47 A

Never exceed 12 A on a single circuit. Power-linking cables can be purchased separately.

ÉPIX LINE Product Linking

It is possible to link up to 10 ÉPIX LINE 10 IP products, or up to 20 ÉPIX LINE 10 IP S products, from each port of the ÉPIX D4 IP in **STANDARD** mode.

It is possible to link up to 6 ÉPIX LINE 10 IP products, or up to 13 ÉPIX LINE 10 IP S products, from each port of the ÉPIX D4 IP in **HI OUTPUT** mode.

Mode	ÉPIX LINE 10 IP per Port	ÉPIX LINE 10 IP S per Port
STANDARD	Up to 10	Up to 20
HI OUTPUT	Up to 6	Up to 13

Signal Connections

The ÉPIX D4 IP can receive an Art-Net™, sACN, or KLSTR.ctrl signal. The product has 3 Seetronic Etherkon (etherCON-compatible) through ports. If using other compatible products with this product, it is possible to control each individually with a single controller.

Control Personalities

The ÉPIX D4 IP uses a KLSTR.ctrl, Art-Net™, or sACN signal for its 7 control personalities: **Test Patterns**, **Effects Engine**, **Full Pixel Control**, **Groups of 5 Pixels**, **Groups of 10 Pixels**, **Groups of 25 Pixels**, and **Groups of 50 Pixels**.

- Refer to the Operation chapter to learn how to configure the ÉPIX D4 IP to work in these personalities.
- The eDMX Channel Assignments and Values section provides detailed information regarding the control personalities.

KLSTR Connection

KLSTR.ctrl is a lighting control system that transfers DMX and RDM over an ethernet connection and automatically assigns fixture ID's and addresses to connected products. It uses topological models, including MVR, to configure layout, modes, and 3D position of integrated products.

Visit www.klstr.tech/ctrl to download and install KLSTR.ctrl to a PC.

Art-Net™ Connection

Art-Net™ is an Ethernet protocol that uses TCP/IP which transfers a large amount of DMX512 data using an ethernet connection over a large network. An Art-Net™ protocol document is available from www.chauvetprofessional.com.

Art-Net™ designed by and copyright Artistic Licence Holdings Ltd.

Remote Device Management

Art-Net™ Remote Device Management, or Art-RDM, is a standard for allowing Art-Net™-enabled devices to communicate bi-directionally along existing ethernet cabling. Check the Art-Net™ controller's User Manual or with the manufacturer as not all Art-Net™ controllers have this capability. The ÉPIX D4 IP supports Art-RDM protocol that allows feedback to make changes to menu map options.

sACN Connection

Also known as ANSI E1.31, streaming ACN is an Ethernet protocol that uses the layering and formatting of Architecture for Control Networks to transport DMX512 data over IP or any other ACN compatible network.

RSTP Connection

Rapid Spanning Tree Protocol allows the control system to select the lowest STP cost among multiple redundant pathways from a single switch or router. If a pathway is interrupted or broken, RSTP switches to the pathway with the next lowest STP cost to allow the output to continue.

Connect a separate output from the switch or router to the last ÉPIX D4 IP in the ethernet daisy chain to establish an RSTP redundancy.

Ethernet Connection Diagram

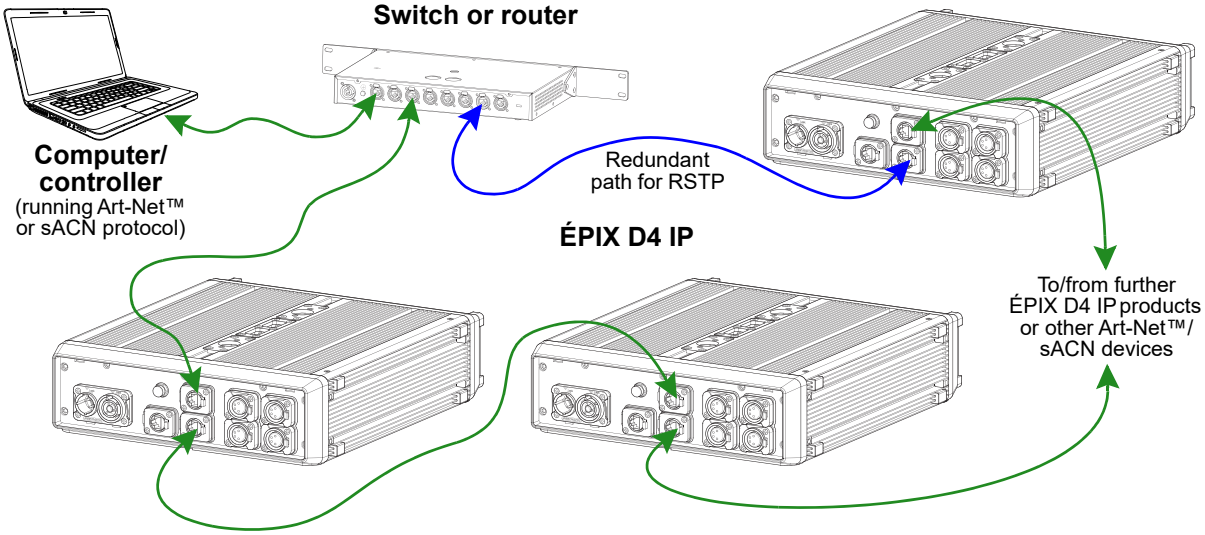

Mounting

Before mounting the product, read and follow the safety recommendations indicated in the Safety Notes.

Orientation

Always mount this product in a safe position, making sure there is adequate room for ventilation, configuration, and maintenance.

Rigging

Chauvet recommends using the following general guidelines when mounting this product.

- Before deciding on a location for the product, make sure there is easy access to the product for maintenance and programming purposes.
- Make sure that the structure and attachment points can support the weight before hanging the product (see the Technical Specifications for weight information).
- When mounting the product overhead, always use a safety cable. Mount the product securely to a rigging point, whether an elevated platform or a truss.
- When rigging the product onto a truss, use a mounting clamp of appropriate weight capacity.
- When power linking multiple products, mount the products close enough for power-linking cables to reach.

Procedure

The ÉPIX D4 IP comes with an Omega bracket. The user can directly attach a mounting clamp (sold separately) to this Omega bracket. Make sure the clamp is capable of supporting the weight of this product. For the Chauvet Professional line of mounting clamps, go to http://www.trusst.com/products.

Mounting Diagram

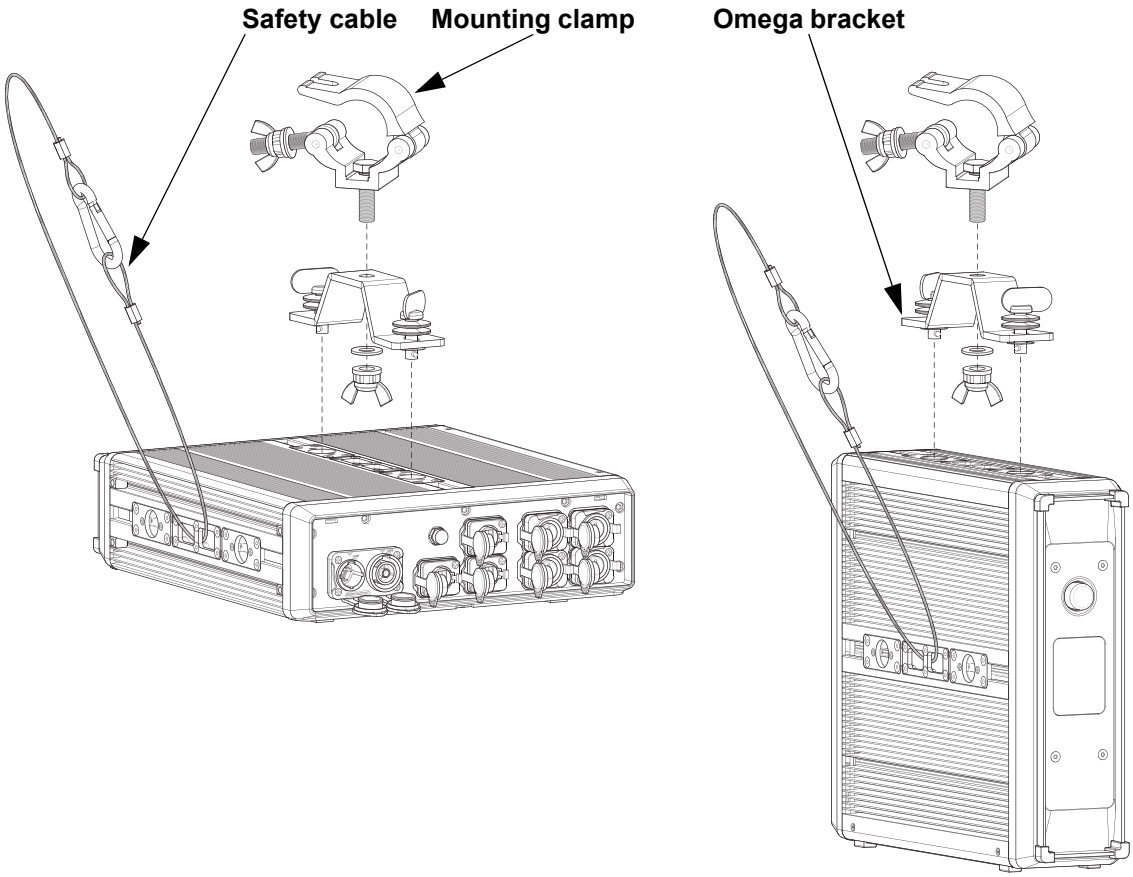

Rack Ears

The ÉPIX D4 IP comes with 2 rack ears which allow the user to install it in a standard 19 in. rack.

4. Operation

Control Panel Description

Type	Function
Encoder	Rotate to navigate upwards or downwards through the menu list, and increase or decrease a selected numeric value. Push to enable the currently displayed menu option or set the currently selected value into the selected function.

Control Options

Set the ÉPIX D4 IP starting address in the **001-511** DMX range. This enables control of up to 256 products in the 2-channel **Test Patterns** personality.

Programming with a PC

Full control options can only be accessed through the KLSTR.ctrl application on a PC.

Visit www.klstr.tech/ctrl to download and install KLSTR.ctrl.

Programming with the Display

Refer to the menu map to understand the menu options. The menu map shows the main menu and a variable number of programming levels for each option.

- To access the menu from the Home Screens, press the encoder.
- To navigate to the desired option in the menu, rotate the encoder until the option is indicated.
- Press the encoder to select the indicated option.
- To return to the main menu, select the **Back** option repeatedly until it shows on the display.

Home Screen

The ÉPIX D4 IP has a home screen that shows the current control protocols, personalities, starting addresses, IP addresses, and universes. To see the home screen, select the **Back** option repeatedly until it shows on the display. From the home screen, press the encoder to reach the main menu.

Menu Map

Refer to the ÉPIX D4 IP product page on www.chauvetprofessional.com for the latest menu map.

Main Level	Programming Levels			Description
Discovery	All Ports			Performs product discovery on all ports
	Individual Port	1–4		Performs product discovery
	Change power mode			Navigates to the **Power mode** setting
Test Patterns	Dynamic			Selects a test pattern for output
	Rainbow			
	Red			
	Green			
	Blue			
	White			
	Full White			
Output Control	Power mode	STANDARD		Limits **Intensity** to 150 or lower
		HI OUTPUT		Permits **Intensity** values up to 255
	Intensity	000–255		Sets the maximum intensity of output
	Dim curve	LINEAR		Selects a dimming curve
		SQUARE		
		INV SQUARE		
		S-CURVE		
	Port 1–4	ON		Enables output for the selected port
		OFF		Disables output for the selected port
Device Mode	eDMX			Sets the product to eDMX mode
	Effects			Sets the product to Effects mode
	Test Patterns			Navigates to the **Test Patterns** setting
	Blackout			Blacks out all light output
eDMX Protocols	_/v	ArtNet		Selects the Art-net™ ethernet protocol
	_/v	sACN (E1.31)		Selects the sACN ethernet protocol
eDMX Mapping	Mode	KLSTR		Selects control via KLSTR.ctrl
		Manual		Selects control via the product display
	Universe	00000–99999	v	Selects the universe of this ÉPIX D4 IP
	Address	001–512	v	Selects the address of this ÉPIX D4 IP
	Dense mapping	ON		Enables more complete use of eDMX universes by assigning ÉPIX Line 10 IP S products to available space at the end of a universe
		OFF		Assigns all product universes by connection order
	Merge mode	HTP		Displays the HTP merge mode for redundancy and backups
	Save Changes			Saves changes to eDMX mapping
	Discard Changes			Undoes changes to eDMX mapping
	Reset to Defaults			Resets eDMX mapping to default

Main Level	Programming Levels			Description
eDMX Personality	Test Patterns			2-channel: dimmer, test pattern
	Effects Engine			18-channel: dimmer, randomizer, effect, speed, direction, color amount, 3-zone RGBW
	Full Pixel Control			150/300-channel: 50/100-zone RGB
	Groups of 5 Pixels			30/60-channel: 10/20-zone RGB
	Groups of 10 Pixels			15/30-channel: 5/10-zone
	Groups of 25 Pixels			6/12-channel: 2/4-zone RGB
	Groups of 50 Pixels			3/6-channel: 1/2-zone RGB
Network	Mode	STATIC		Displays the static network mode
	IP	_ _ _._ _ _._ _ _._ _ _	v	Sets the IP address
	SM	_ _ _._ _ _._ _ _._ _ _	v	Sets the subnet mask
	Save Changes			Saves changes to network settings
	Discard Changes			Undoes changes to network settings
	Reset to Defaults			Resets network settings to default
Fixture ID	Reset to Default			Resets Fixture ID to **Unassigned**
	ID:	000001–999999		Sets the Fixture ID for KLSTR.ctrl programming
Display	Backlight	ALWAYS ON		Selects the duration of the display backlight timer
		10 SEC		
		20 SEC		
		30 SEC		
	Brightness	0–100%		Sets the display brightness
	Inverse	NORMAL		Upright display
		INVERSE		Inverted display
Info	SW:	01.25		Displays product information
	BL:	1501.0103		
	HW:	00.02		
	SER:	_ _ _ _ _ _ _ _ _ _		
	SW:	3.0.0-303-g84bbb0f		
	BL:	1.1.3-195-gfd1eeb6		
	HW:	KLSTR.one-7621 1.0		
	UID:	_ _ _ _:_ _ _ _ _ _ _ _		
Factory Reset	Cancel			Cancels factory reset
	OK			Resets the product to factory defaults

Home Screens

The 5 home screens of the ÉPIX D4 IP show the current settings and status of the product and provide shortcuts to several functions. To see the home screen, select the **Back** option repeatedly until it shows on the display. Rotate the encoder to switch home screens. From the home screen, press the encoder to reach the menu or activate the indicated setting.

Port State Screen

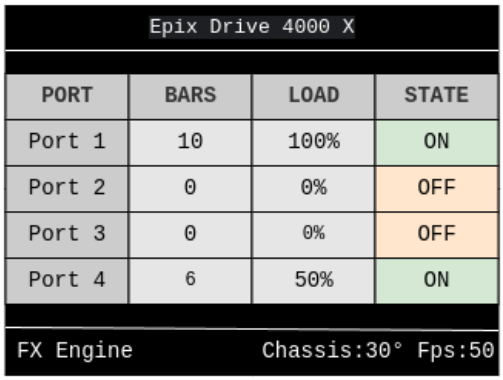

The Port State home screen displays the number of products connected to each port, the percentage of each port's capacity loaded, and each port's status as **ON**, **OFF**, **HOLD**, **OVERLOAD**, **SHORT**, or **ERROR**.

If any port shows **HOLD**, then it is not receiving an eDMX signal or standalone instructions. Verify that eDMX is connected and that the universes of the port match the universes from the controller and in KLSTR.ctrl.

If any port shows **OVERLOAD**, **SHORT**, or **ERROR**, pushing the encoder will navigate to the **Output Control** menu. See Error Codes for more information.

Control Mode Screen

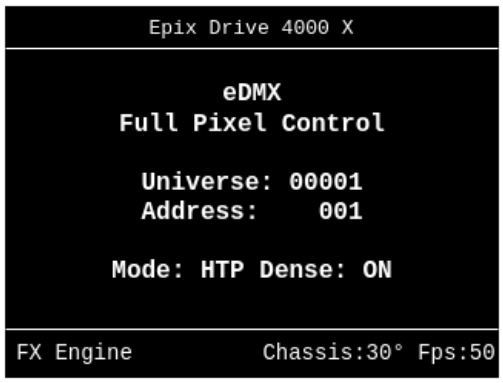

The Control Mode home screen displays the current control settings, such as **Device Mode**, **eDMX Personality**, **Universe**, **Address**, and whether **Dense mapping** is active.

Product Info Screen

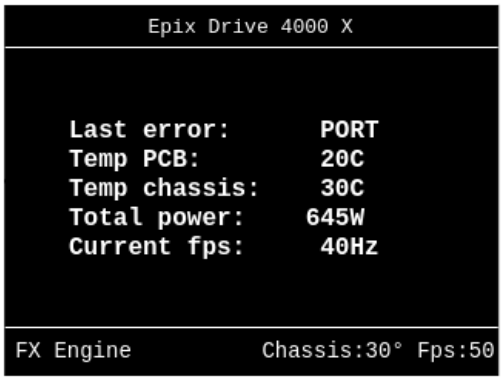

The Product Info screen displays the most recent error type, current product internal and external temperatures, current power consumption, and the current output frame rate.

Toggle Identify Screen

The Toggle Identify screen provides the Identify function for all ports. When active, each connected product will indicate an identification pattern of blinking pixels.
More specific Identify functions are available through the KLSTR.ctrl application.

Global Color Screen

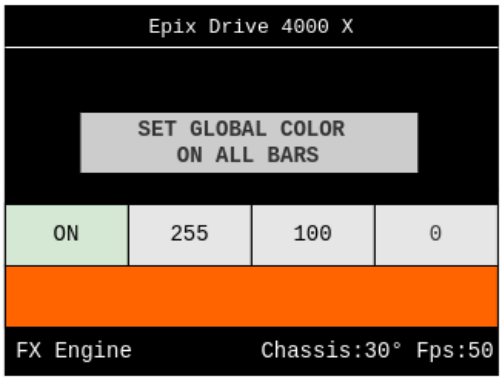

The Global Color screen allows a single RGB value to be output by all connected product.

Control Configuration

Use control configurations to operate the product with an Art-Net™ or sACN controller, or with a combination of these two protocols, with or without the KLSTR.ctrl application.

eDMX Mode

To enable eDMX control, eDMX must be the active mode. To set the device mode to eDMX:

1. Go to the **Device Mode** main level.
2. Select the **eDMX** option.

eDMX Protocols

The ÉPIX D4 IP can work with a single controller or with multiple controllers running 2 different control protocols. To set the protocols:

1. Go to the **eDMX Protocols** main level.
2. Select the desired protocol(s), from **ArtNet** or **sACN (E1.31)**. A **v** indicates the protocol is enabled.

eDMX Mapping

The **eDMX Mapping** menu provides options for manual or KLSTR.ctrl configuration, **Universe**, **Address**, and **Dense mapping**.

Configuration Mode

To switch between configuring the product manually or through the KLSTR.ctrl application:

1. Go to the **eDMX Mapping** main level.
2. Select the **Mode** option.
3. Select the desired mode, from **KLSTR** or **Manual**.

Universe

The Art-Net™ and sACN control protocols require a universe address in addition to the starting address. The ÉPIX D4 IP will assign universes to each connected product based on the **eDMX Protocols**, the **eDMX Mapping** settings, and the selected **eDMX Personality**. To set the starting universe:

1. Go to the **eDMX Mapping** main level.
2. Select the **Universe** option.
3. Select the starting universe (**00000**–**99999** for **ArtNet**, or **00001–99999** for **sACN**).

Address

Each ÉPIX D4 IP will assign a consecutive starting address to each connected product based on the starting address assigned to the it and the selected personality. To set the starting address:

1. Go to the **eDMX Mapping** main level.
2. Select the **Address** option.
3. Select the starting address (**1**–**512**).

ÉPIX Line Product	Personality	Channels	Products per Universe	Highest Address
All	**Test Patterns**	**2**	**256**	**511**
All	**Effects Engine**	**18**	**28**	**495**
ÉPIX Line 10 IP S	**Full Pixel Control**	**150**	**3**	**363**
ÉPIX Line 10 IP		**300**	**1**	**213**
ÉPIX Line 10 IP S	**Groups of 5 Pixels**	**30**	**17**	**483**
ÉPIX Line 10 IP		**60**	**8**	**453**
ÉPIX Line 10 IP S	**Groups of 10 Pixels**	**15**	**34**	**498**
ÉPIX Line 10 IP		**30**	**17**	**483**
ÉPIX Line 10 IP S	**Groups of 25 Pixels**	**6**	**85**	**507**
ÉPIX Line 10 IP		**12**	**42**	**501**
ÉPIX Line 10 IP S	**Groups of 50 Pixels**	**3**	**170**	**510**
ÉPIX Line 10 IP		**6**	**85**	**507**

All ÉPIX D4 IP products with the same personality and starting address will respond in unison, but a different configuration of connected products and/or personality will cause addressing overlap.

See the **eDMX Personality** section to select the personality.

Dense Mapping

When assigning eDMX addresses and universes to connected products, the ÉPIX D4 IP will automatically move a product to the next universe if there isn't enough channel capacity for it in the current universe.

The Dense Mapping function allows more efficient use of each eDMX universe's channel capacity, by assigning ÉPIX Line 10 IP S products to addresses near the end of universes otherwise taken up by ÉPIX Line 10 IP products.

When Dense Mapping is disabled, the ÉPIX D4 IP assigns all connected product addresses and universes by their connection order.

To enable or disable Dense Mapping:

1. Go to the **eDMX Mapping** main level.
2. Select the **Dense mapping** option.
3. Select from **ON** or **OFF**.

Saving eDMX Mapping Settings

When changing the eDMX mapping settings, it is necessary to save them in order to apply the changes to the product. To save or cancel changes, or to reset eDMX Mapping to the default settings:

1. Make any change to the **eDMX Mapping** settings.
2. Select from **Save Changes**, **Discard Changes**, or **Reset to Default**.

Leaving the eDMX Mapping menu without selecting Save Changes will Discard Changes.

eDMX Personality

The ÉPIX D4 IP has 7 control personalities, set by the ÉPIX D4 IP. To set the eDMX personality:

1. Go to the **eDMX Personality** main level.
2. Select the desired personality, from **Test Patterns**, **Effects Engine**, **Full Pixel Control**, **Groups of 5 Pixels**, **Groups of 10 Pixels**, **Groups of 25 Pixels**, or **Groups of 50 Pixels**.

Network Configuration

The Network settings control the IP address and subnet mask of the product.

IP Address

To set the IP address:

1. Go to the **Network** main level.
2. Select the **IP** option.
3. Set the 4 values of the IP address from **000–255**.
4. Select **v** to confirm.

Subnet Mask

To set the subnet mask:

1. Go to the **Network** main level.
2. Select the **SM** option.
3. Set the 4 values of the subnet mask from **000–255**.
4. Select **v** to confirm.

Saving Network Settings

When changing the IP address or subnet mask, it is necessary to save them in order to apply the changes to the product. To save or cancel changes, or to reset both the IP address and subnet mask to the default settings:

1. Make any change to the **Network** settings.
2. Select from **Save Changes**, **Discard Changes**, or **Reset to Default**.

Leaving the Network menu without selecting Save Changes will Discard Changes.

eDMX Channel Assignments and Values

Test Pattern

Channel	Function	Value	Percent/Setting
1	**Dimmer**	000 ⇔ 255	0–100%
2	**Test pattern**	000 ⇔ 009	Dynamic
		010 ⇔ 019	Rainbow
		020 ⇔ 029	Red
		030 ⇔ 039	Green
		040 ⇔ 049	Blue
		050 ⇔ 255	White

Effects Engine

Channel	Function	Value	Percent/Setting
1	**Dimmer**	000 ⇔ 255	0–100%
2	**Effect randomizer**	000 ⇔ 009	Off
		010 ⇔ 019	5 second intervals
		020 ⇔ 029	10 second intervals
		030 ⇔ 039	30 second intervals
		040 ⇔ 049	1 minute intervals
		050 ⇔ 059	2 minute intervals
		060 ⇔ 069	5 minute intervals
		070 ⇔ 079	10 minute intervals
		080 ⇔ 089	30 minute intervals
		090 ⇔ 255	1 hour intervals
3	**Effect**	000 ⇔ 009	Global color
		010 ⇔ 019	Fixed colors
		020 ⇔ 029	Blend
		030 ⇔ 039	Burst
		040 ⇔ 049	Chaser
		050 ⇔ 059	Color flash
		060 ⇔ 069	Cycle
		070 ⇔ 079	Double shift
		080 ⇔ 089	Expander
		090 ⇔ 099	Flex rainbow
		100 ⇔ 109	Glow
		110 ⇔ 119	Moving blend
		120 ⇔ 129	Multi chaser
		130 ⇔ 139	Paint
		140 ⇔ 149	Sparkle
		150 ⇔ 159	Strobo
		160 ⇔ 169	Toggler
		170 ⇔ 179	Vegas
		180 ⇔ 189	Waves
		190 ⇔ 255	Xmas lights
4	**Effect speed**	000 ⇔ 255	Effect speed, slow to fast

Channel	Function	Value	Percent/Setting
5	**Effect direction**	000 ⇔ 127 128 ⇔ 255	Forward Reverse
6	**Effect color amount**	000 ⇔ 063 064 ⇔ 127 128 ⇔ 191 192 ⇔ 255	1 color 2 colors 3 colors Random number cycle
7	**Color 1 red**	000 ⇔ 255	0–100%
8	**Color 1 green**	000 ⇔ 255	0–100%
9	**Color 1 blue**	000 ⇔ 255	0–100%
10	**Color 1 white**	000 ⇔ 255	0–100%
11	**Color 2 red**	000 ⇔ 255	0–100%
12	**Color 2 green**	000 ⇔ 255	0–100%
13	**Color 2 blue**	000 ⇔ 255	0–100%
14	**Color 2 white**	000 ⇔ 255	0–100%
15	**Color 3 red**	000 ⇔ 255	0–100%
16	**Color 3 green**	000 ⇔ 255	0–100%
17	**Color 3 blue**	000 ⇔ 255	0–100%
18	**Color 3 white**	000 ⇔ 255	0–100%

Full Pixel Control

Channel	Function	Value	Percent/Setting
1	**Red 1**	000 ⇔ 255	0–100%
2	**Green 1**	000 ⇔ 255	0–100%
3	**Blue 1**	000 ⇔ 255	0–100%
4	**Red 2**	000 ⇔ 255	0–100%
5	**Green 2**	000 ⇔ 255	0–100%
6	**Blue 2**	000 ⇔ 255	0–100%
7	**Red 3**	000 ⇔ 255	0–100%
8	**Green 3**	000 ⇔ 255	0–100%
9	**Blue 3**	000 ⇔ 255	0–100%
10	**Red 4**	000 ⇔ 255	0–100%
11	**Green 4**	000 ⇔ 255	0–100%
12	**Blue 4**	000 ⇔ 255	0–100%
13	**Red 5**	000 ⇔ 255	0–100%
14	**Green 5**	000 ⇔ 255	0–100%
15	**Blue 5**	000 ⇔ 255	0–100%
16	**Red 6**	000 ⇔ 255	0–100%
17	**Green 6**	000 ⇔ 255	0–100%
18	**Blue 6**	000 ⇔ 255	0–100%
19	**Red 7**	000 ⇔ 255	0–100%
20	**Green 7**	000 ⇔ 255	0–100%
21	**Blue 7**	000 ⇔ 255	0–100%
22	**Red 8**	000 ⇔ 255	0–100%
23	**Green 8**	000 ⇔ 255	0–100%
24	**Blue 8**	000 ⇔ 255	0–100%
25	**Red 9**	000 ⇔ 255	0–100%

Channel	Function	Value	Percent/Setting
26	Green 9	000 ⇔ 255	0–100%
27	Blue 9	000 ⇔ 255	0–100%
28	Red 10	000 ⇔ 255	0–100%
29	Green 10	000 ⇔ 255	0–100%
30	Blue 10	000 ⇔ 255	0–100%
31	Red 11	000 ⇔ 255	0–100%
32	Green 11	000 ⇔ 255	0–100%
33	Blue 11	000 ⇔ 255	0–100%
34	Red 12	000 ⇔ 255	0–100%
35	Green 12	000 ⇔ 255	0–100%
36	Blue 12	000 ⇔ 255	0–100%
37	Red 13	000 ⇔ 255	0–100%
38	Green 13	000 ⇔ 255	0–100%
39	Blue 13	000 ⇔ 255	0–100%
40	Red 14	000 ⇔ 255	0–100%
41	Green 14	000 ⇔ 255	0–100%
42	Blue 14	000 ⇔ 255	0–100%
43	Red 15	000 ⇔ 255	0–100%
44	Green 15	000 ⇔ 255	0–100%
45	Blue 15	000 ⇔ 255	0–100%
46	Red 16	000 ⇔ 255	0–100%
47	Green 16	000 ⇔ 255	0–100%
48	Blue 16	000 ⇔ 255	0–100%
49	Red 17	000 ⇔ 255	0–100%
50	Green 17	000 ⇔ 255	0–100%
51	Blue 17	000 ⇔ 255	0–100%
52	Red 18	000 ⇔ 255	0–100%
53	Green 18	000 ⇔ 255	0–100%
54	Blue 18	000 ⇔ 255	0–100%
55	Red 19	000 ⇔ 255	0–100%
56	Green 19	000 ⇔ 255	0–100%
57	Blue 19	000 ⇔ 255	0–100%
58	Red 20	000 ⇔ 255	0–100%
59	Green 20	000 ⇔ 255	0–100%
60	Blue 20	000 ⇔ 255	0–100%
61	Red 21	000 ⇔ 255	0–100%
62	Green 21	000 ⇔ 255	0–100%
63	Blue 21	000 ⇔ 255	0–100%
64	Red 22	000 ⇔ 255	0–100%
65	Green 22	000 ⇔ 255	0–100%
66	Blue 22	000 ⇔ 255	0–100%
67	Red 23	000 ⇔ 255	0–100%
68	Green 23	000 ⇔ 255	0–100%
69	Blue 23	000 ⇔ 255	0–100%
70	Red 24	000 ⇔ 255	0–100%
71	Green 24	000 ⇔ 255	0–100%

Channel	Function	Value	Percent/Setting
72	Blue 24	000 ⇔ 255	0–100%
73	Red 25	000 ⇔ 255	0–100%
74	Green 25	000 ⇔ 255	0–100%
75	Blue 25	000 ⇔ 255	0–100%
76	Red 26	000 ⇔ 255	0–100%
77	Green 26	000 ⇔ 255	0–100%
78	Blue 26	000 ⇔ 255	0–100%
79	Red 27	000 ⇔ 255	0–100%
80	Green 27	000 ⇔ 255	0–100%
81	Blue 27	000 ⇔ 255	0–100%
82	Red 28	000 ⇔ 255	0–100%
83	Green 28	000 ⇔ 255	0–100%
84	Blue 28	000 ⇔ 255	0–100%
85	Red 29	000 ⇔ 255	0–100%
86	Green 29	000 ⇔ 255	0–100%
87	Blue 29	000 ⇔ 255	0–100%
88	Red 30	000 ⇔ 255	0–100%
89	Green 30	000 ⇔ 255	0–100%
90	Blue 30	000 ⇔ 255	0–100%
91	Red 31	000 ⇔ 255	0–100%
92	Green 31	000 ⇔ 255	0–100%
93	Blue 31	000 ⇔ 255	0–100%
94	Red 32	000 ⇔ 255	0–100%
95	Green 32	000 ⇔ 255	0–100%
96	Blue 32	000 ⇔ 255	0–100%
97	Red 33	000 ⇔ 255	0–100%
98	Green 33	000 ⇔ 255	0–100%
99	Blue 33	000 ⇔ 255	0–100%
100	Red 34	000 ⇔ 255	0–100%
101	Green 34	000 ⇔ 255	0–100%
102	Blue 34	000 ⇔ 255	0–100%
103	Red 35	000 ⇔ 255	0–100%
104	Green 35	000 ⇔ 255	0–100%
105	Blue 35	000 ⇔ 255	0–100%
106	Red 36	000 ⇔ 255	0–100%
107	Green 36	000 ⇔ 255	0–100%
108	Blue 36	000 ⇔ 255	0–100%
109	Red 37	000 ⇔ 255	0–100%
110	Green 37	000 ⇔ 255	0–100%
111	Blue 37	000 ⇔ 255	0–100%
112	Red 38	000 ⇔ 255	0–100%
113	Green 38	000 ⇔ 255	0–100%
114	Blue 38	000 ⇔ 255	0–100%
115	Red 39	000 ⇔ 255	0–100%
116	Green 39	000 ⇔ 255	0–100%
117	Blue 39	000 ⇔ 255	0–100%

Channel	Function	Value	Percent/Setting
118	**Red 40**	000 ⇔ 255	0–100%
119	**Green 40**	000 ⇔ 255	0–100%
120	**Blue 40**	000 ⇔ 255	0–100%
121	**Red 41**	000 ⇔ 255	0–100%
122	**Green 41**	000 ⇔ 255	0–100%
123	**Blue 41**	000 ⇔ 255	0–100%
124	**Red 42**	000 ⇔ 255	0–100%
125	**Green 42**	000 ⇔ 255	0–100%
126	**Blue 42**	000 ⇔ 255	0–100%
127	**Red 43**	000 ⇔ 255	0–100%
128	**Green 43**	000 ⇔ 255	0–100%
129	**Blue 43**	000 ⇔ 255	0–100%
130	**Red 44**	000 ⇔ 255	0–100%
131	**Green 44**	000 ⇔ 255	0–100%
132	**Blue 44**	000 ⇔ 255	0–100%
133	**Red 45**	000 ⇔ 255	0–100%
134	**Green 45**	000 ⇔ 255	0–100%
135	**Blue 45**	000 ⇔ 255	0–100%
136	**Red 46**	000 ⇔ 255	0–100%
137	**Green 46**	000 ⇔ 255	0–100%
138	**Blue 46**	000 ⇔ 255	0–100%
139	**Red 47**	000 ⇔ 255	0–100%
140	**Green 47**	000 ⇔ 255	0–100%
141	**Blue 47**	000 ⇔ 255	0–100%
142	**Red 48**	000 ⇔ 255	0–100%
143	**Green48**	000 ⇔ 255	0–100%
144	**Blue 48**	000 ⇔ 255	0–100%
145	**Red 49**	000 ⇔ 255	0–100%
146	**Green 49**	000 ⇔ 255	0–100%
147	**Blue 49**	000 ⇔ 255	0–100%
148	**Red 50**	000 ⇔ 255	0–100%
149	**Green 50**	000 ⇔ 255	0–100%
150	**Blue 50**	000 ⇔ 255	0–100%
151	**Red 51**	000 ⇔ 255	0–100%
152	**Green 51**	000 ⇔ 255	0–100%
153	**Blue 51**	000 ⇔ 255	0–100%
154	**Red 52**	000 ⇔ 255	0–100%
155	**Green 52**	000 ⇔ 255	0–100%
156	**Blue 52**	000 ⇔ 255	0–100%
157	**Red 53**	000 ⇔ 255	0–100%
158	**Green 53**	000 ⇔ 255	0–100%
159	**Blue 53**	000 ⇔ 255	0–100%
160	**Red 54**	000 ⇔ 255	0–100%
161	**Green 54**	000 ⇔ 255	0–100%
162	**Blue 54**	000 ⇔ 255	0–100%
163	**Red 55**	000 ⇔ 255	0–100%

Channel	Function	Value	Percent/Setting
164	**Green 55**	000 ⇔ 255	0–100%
165	**Blue 55**	000 ⇔ 255	0–100%
166	**Red 56**	000 ⇔ 255	0–100%
167	**Green 56**	000 ⇔ 255	0–100%
168	**Blue 56**	000 ⇔ 255	0–100%
169	**Red 57**	000 ⇔ 255	0–100%
170	**Green 57**	000 ⇔ 255	0–100%
171	**Blue 57**	000 ⇔ 255	0–100%
172	**Red 58**	000 ⇔ 255	0–100%
173	**Green 58**	000 ⇔ 255	0–100%
174	**Blue 58**	000 ⇔ 255	0–100%
175	**Red 59**	000 ⇔ 255	0–100%
176	**Green 59**	000 ⇔ 255	0–100%
177	**Blue 59**	000 ⇔ 255	0–100%
178	**Red 60**	000 ⇔ 255	0–100%
179	**Green 60**	000 ⇔ 255	0–100%
180	**Blue 60**	000 ⇔ 255	0–100%
181	**Red 61**	000 ⇔ 255	0–100%
182	**Green 61**	000 ⇔ 255	0–100%
183	**Blue 61**	000 ⇔ 255	0–100%
184	**Red 62**	000 ⇔ 255	0–100%
185	**Green 62**	000 ⇔ 255	0–100%
186	**Blue 62**	000 ⇔ 255	0–100%
187	**Red 63**	000 ⇔ 255	0–100%
188	**Green 63**	000 ⇔ 255	0–100%
189	**Blue 63**	000 ⇔ 255	0–100%
190	**Red 64**	000 ⇔ 255	0–100%
191	**Green 64**	000 ⇔ 255	0–100%
192	**Blue 64**	000 ⇔ 255	0–100%
193	**Red 65**	000 ⇔ 255	0–100%
194	**Green 65**	000 ⇔ 255	0–100%
195	**Blue 65**	000 ⇔ 255	0–100%
196	**Red 66**	000 ⇔ 255	0–100%
197	**Green 66**	000 ⇔ 255	0–100%
198	**Blue 66**	000 ⇔ 255	0–100%
199	**Red 67**	000 ⇔ 255	0–100%
200	**Green 67**	000 ⇔ 255	0–100%
201	**Blue 67**	000 ⇔ 255	0–100%
202	**Red 68**	000 ⇔ 255	0–100%
203	**Green 68**	000 ⇔ 255	0–100%
204	**Blue 68**	000 ⇔ 255	0–100%
205	**Red 69**	000 ⇔ 255	0–100%
206	**Green 69**	000 ⇔ 255	0–100%
207	**Blue 69**	000 ⇔ 255	0–100%
208	**Red 70**	000 ⇔ 255	0–100%
209	**Green 70**	000 ⇔ 255	0–100%

Channel	Function	Value	Percent/Setting
210	Blue 70	000 ⇔ 255	0–100%
211	Red 71	000 ⇔ 255	0–100%
212	Green 71	000 ⇔ 255	0–100%
213	Blue 71	000 ⇔ 255	0–100%
214	Red 72	000 ⇔ 255	0–100%
215	Green 72	000 ⇔ 255	0–100%
216	Blue 72	000 ⇔ 255	0–100%
217	Red 73	000 ⇔ 255	0–100%
218	Green 73	000 ⇔ 255	0–100%
219	Blue 73	000 ⇔ 255	0–100%
220	Red 74	000 ⇔ 255	0–100%
221	Green 74	000 ⇔ 255	0–100%
222	Blue 74	000 ⇔ 255	0–100%
223	Red 75	000 ⇔ 255	0–100%
224	Green 75	000 ⇔ 255	0–100%
225	Blue 75	000 ⇔ 255	0–100%
226	Red 76	000 ⇔ 255	0–100%
227	Green 76	000 ⇔ 255	0–100%
228	Blue 76	000 ⇔ 255	0–100%
229	Red 77	000 ⇔ 255	0–100%
230	Green 77	000 ⇔ 255	0–100%
231	Blue 77	000 ⇔ 255	0–100%
232	Red 78	000 ⇔ 255	0–100%
233	Green 78	000 ⇔ 255	0–100%
234	Blue 78	000 ⇔ 255	0–100%
235	Red 79	000 ⇔ 255	0–100%
236	Green 79	000 ⇔ 255	0–100%
237	Blue 79	000 ⇔ 255	0–100%
238	Red 80	000 ⇔ 255	0–100%
239	Green 80	000 ⇔ 255	0–100%
240	Blue 80	000 ⇔ 255	0–100%
241	Red 81	000 ⇔ 255	0–100%
242	Green 81	000 ⇔ 255	0–100%
243	Blue 81	000 ⇔ 255	0–100%
244	Red 82	000 ⇔ 255	0–100%
245	Green 82	000 ⇔ 255	0–100%
246	Blue 82	000 ⇔ 255	0–100%
247	Red 83	000 ⇔ 255	0–100%
248	Green 83	000 ⇔ 255	0–100%
249	Blue 83	000 ⇔ 255	0–100%
250	Red 84	000 ⇔ 255	0–100%
251	Green 84	000 ⇔ 255	0–100%
252	Blue 84	000 ⇔ 255	0–100%
253	Red 85	000 ⇔ 255	0–100%
254	Green 85	000 ⇔ 255	0–100%
255	Blue 85	000 ⇔ 255	0–100%

Channel	Function	Value	Percent/Setting
256	**Red 86**	000 ⇔ 255	0–100%
257	**Green 86**	000 ⇔ 255	0–100%
258	**Blue 86**	000 ⇔ 255	0–100%
259	**Red 87**	000 ⇔ 255	0–100%
260	**Green 87**	000 ⇔ 255	0–100%
261	**Blue 87**	000 ⇔ 255	0–100%
262	**Red 88**	000 ⇔ 255	0–100%
263	**Green 88**	000 ⇔ 255	0–100%
264	**Blue 88**	000 ⇔ 255	0–100%
265	**Red 89**	000 ⇔ 255	0–100%
266	**Green 89**	000 ⇔ 255	0–100%
267	**Blue 89**	000 ⇔ 255	0–100%
268	**Red 90**	000 ⇔ 255	0–100%
269	**Green 90**	000 ⇔ 255	0–100%
270	**Blue 90**	000 ⇔ 255	0–100%
271	**Red 91**	000 ⇔ 255	0–100%
272	**Green 91**	000 ⇔ 255	0–100%
273	**Blue 91**	000 ⇔ 255	0–100%
274	**Red 92**	000 ⇔ 255	0–100%
275	**Green 92**	000 ⇔ 255	0–100%
276	**Blue 92**	000 ⇔ 255	0–100%
277	**Red 93**	000 ⇔ 255	0–100%
278	**Green 93**	000 ⇔ 255	0–100%
279	**Blue 93**	000 ⇔ 255	0–100%
280	**Red 94**	000 ⇔ 255	0–100%
281	**Green 94**	000 ⇔ 255	0–100%
282	**Blue 94**	000 ⇔ 255	0–100%
283	**Red 95**	000 ⇔ 255	0–100%
284	**Green 95**	000 ⇔ 255	0–100%
285	**Blue 95**	000 ⇔ 255	0–100%
286	**Red 96**	000 ⇔ 255	0–100%
287	**Green 96**	000 ⇔ 255	0–100%
288	**Blue 96**	000 ⇔ 255	0–100%
289	**Red 97**	000 ⇔ 255	0–100%
290	**Green 97**	000 ⇔ 255	0–100%
291	**Blue 97**	000 ⇔ 255	0–100%
292	**Red 98**	000 ⇔ 255	0–100%
293	**Green 98**	000 ⇔ 255	0–100%
294	**Blue 98**	000 ⇔ 255	0–100%
295	**Red 99**	000 ⇔ 255	0–100%
296	**Green 99**	000 ⇔ 255	0–100%
297	**Blue 99**	000 ⇔ 255	0–100%
298	**Red 100**	000 ⇔ 255	0–100%
299	**Green 100**	000 ⇔ 255	0–100%
300	**Blue 100**	000 ⇔ 255	0–100%

Groups of 5 Pixels

Channel	Function	Value	Percent/Setting
1	**Red 1–5**	000 ⇔ 255	0–100%
2	**Green 1–5**	000 ⇔ 255	0–100%
3	**Blue 1–5**	000 ⇔ 255	0–100%
4	**Red 6–10**	000 ⇔ 255	0–100%
5	**Green 6–10**	000 ⇔ 255	0–100%
6	**Blue 6–10**	000 ⇔ 255	0–100%
7	**Red 11–15**	000 ⇔ 255	0–100%
8	**Green 11–15**	000 ⇔ 255	0–100%
9	**Blue 11–15**	000 ⇔ 255	0–100%
10	**Red 16–20**	000 ⇔ 255	0–100%
11	**Green 16–20**	000 ⇔ 255	0–100%
12	**Blue 16–20**	000 ⇔ 255	0–100%
13	**Red 21–25**	000 ⇔ 255	0–100%
14	**Green 21–25**	000 ⇔ 255	0–100%
15	**Blue 21–25**	000 ⇔ 255	0–100%
16	**Red 26–30**	000 ⇔ 255	0–100%
17	**Green 26–30**	000 ⇔ 255	0–100%
18	**Blue 26–30**	000 ⇔ 255	0–100%
19	**Red 31–35**	000 ⇔ 255	0–100%
20	**Green 31–35**	000 ⇔ 255	0–100%
21	**Blue 31–35**	000 ⇔ 255	0–100%
22	**Red 36–40**	000 ⇔ 255	0–100%
23	**Green 36–40**	000 ⇔ 255	0–100%
24	**Blue 36–40**	000 ⇔ 255	0–100%
25	**Red 41–45**	000 ⇔ 255	0–100%
26	**Green 41–45**	000 ⇔ 255	0–100%
27	**Blue 41–45**	000 ⇔ 255	0–100%
28	**Red 46–50**	000 ⇔ 255	0–100%
29	**Green 46–50**	000 ⇔ 255	0–100%
30	**Blue 46–50**	000 ⇔ 255	0–100%
31	**Red 51–55**	000 ⇔ 255	0–100%
32	**Green 51–55**	000 ⇔ 255	0–100%
33	**Blue 51–55**	000 ⇔ 255	0–100%
34	**Red 56–60**	000 ⇔ 255	0–100%
35	**Green 56–60**	000 ⇔ 255	0–100%
36	**Blue 56–60**	000 ⇔ 255	0–100%
37	**Red 61–65**	000 ⇔ 255	0–100%
38	**Green 61–65**	000 ⇔ 255	0–100%
39	**Blue 61–65**	000 ⇔ 255	0–100%
40	**Red 66–70**	000 ⇔ 255	0–100%
41	**Green 66–70**	000 ⇔ 255	0–100%
42	**Blue 66–70**	000 ⇔ 255	0–100%
43	**Red 71–75**	000 ⇔ 255	0–100%
44	**Green 71–75**	000 ⇔ 255	0–100%
45	**Blue 71–75**	000 ⇔ 255	0–100%

Channel	Function	Value	Percent/Setting
46	**Red 76–80**	000 ⇔ 255	0–100%
47	**Green 76–80**	000 ⇔ 255	0–100%
48	**Blue 76–80**	000 ⇔ 255	0–100%
49	**Red 81–85**	000 ⇔ 255	0–100%
50	**Green 81–85**	000 ⇔ 255	0–100%
51	**Blue 81–85**	000 ⇔ 255	0–100%
52	**Red 86–90**	000 ⇔ 255	0–100%
53	**Green 86–90**	000 ⇔ 255	0–100%
54	**Blue 86–90**	000 ⇔ 255	0–100%
55	**Red 91–95**	000 ⇔ 255	0–100%
56	**Green 91–95**	000 ⇔ 255	0–100%
57	**Blue 91–95**	000 ⇔ 255	0–100%
58	**Red 96–100**	000 ⇔ 255	0–100%
59	**Green 96–100**	000 ⇔ 255	0–100%
60	**Blue 96–100**	000 ⇔ 255	0–100%

Groups of 10 Pixels

Channel	Function	Value	Percent/Setting
1	**Red 1–10**	000 ⇔ 255	0–100%
2	**Green 1–10**	000 ⇔ 255	0–100%
3	**Blue 1–10**	000 ⇔ 255	0–100%
4	**Red 11–20**	000 ⇔ 255	0–100%
5	**Green 11–20**	000 ⇔ 255	0–100%
6	**Blue 11–20**	000 ⇔ 255	0–100%
7	**Red 21–30**	000 ⇔ 255	0–100%
8	**Green 21–30**	000 ⇔ 255	0–100%
9	**Blue 21–30**	000 ⇔ 255	0–100%
10	**Red 31–40**	000 ⇔ 255	0–100%
11	**Green 31–40**	000 ⇔ 255	0–100%
12	**Blue 31–40**	000 ⇔ 255	0–100%
13	**Red 41–50**	000 ⇔ 255	0–100%
14	**Green 41–50**	000 ⇔ 255	0–100%
15	**Blue 41–50**	000 ⇔ 255	0–100%
16	**Red 51–60**	000 ⇔ 255	0–100%
17	**Green 51–60**	000 ⇔ 255	0–100%
18	**Blue 51–60**	000 ⇔ 255	0–100%
19	**Red 61–70**	000 ⇔ 255	0–100%
20	**Green 61–70**	000 ⇔ 255	0–100%
21	**Blue 61–70**	000 ⇔ 255	0–100%
22	**Red 71–80**	000 ⇔ 255	0–100%
23	**Green 71–80**	000 ⇔ 255	0–100%
24	**Blue 71–80**	000 ⇔ 255	0–100%
25	**Red 81–90**	000 ⇔ 255	0–100%
26	**Green 81–90**	000 ⇔ 255	0–100%
27	**Blue 81–90**	000 ⇔ 255	0–100%
28	**Red 91–100**	000 ⇔ 255	0–100%
29	**Green 91–100**	000 ⇔ 255	0–100%
30	**Blue 91–100**	000 ⇔ 255	0–100%

Groups of 25 Pixels

Channel	Function	Value	Percent/Setting
1	**Red 1–25**	000 ⇔ 255	0–100%
2	**Green 1–25**	000 ⇔ 255	0–100%
3	**Blue 1–25**	000 ⇔ 255	0–100%
4	**Red 26–50**	000 ⇔ 255	0–100%
5	**Green 26–50**	000 ⇔ 255	0–100%
6	**Blue 26–50**	000 ⇔ 255	0–100%
7	**Red 51–75**	000 ⇔ 255	0–100%
8	**Green 51–75**	000 ⇔ 255	0–100%
9	**Blue 51–75**	000 ⇔ 255	0–100%
10	**Red 76–100**	000 ⇔ 255	0–100%
11	**Green 76–100**	000 ⇔ 255	0–100%
12	**Blue 76–100**	000 ⇔ 255	0–100%

Groups of 50 Pixels

Channel	Function	Value	Percent/Setting
1	**Red 1–50**	000 ⇔ 255	0–100%
2	**Green 1–50**	000 ⇔ 255	0–100%
3	**Blue 1–50**	000 ⇔ 255	0–100%
4	**Red 51–100**	000 ⇔ 255	0–100%
5	**Green 51–100**	000 ⇔ 255	0–100%
6	**Blue 51–100**	000 ⇔ 255	0–100%

Standalone Configuration

Use the following options to operate the ÉPIX D4 IP without the use of an external controller.

Effects Engine

To run the ÉPIX D4 IP with a standalone effect selected through the KLSTR.ctrl application:

1. Go to the **Device Mode** main level.
2. Select the **Effects** option.

If an effect has not been selected through KLSTR.ctrl, the output will black out.

Test Patterns

To set the output of the ÉPIX D4 IP to a test pattern:

1. Go to the **Test Patterns** main level or the **Device Mode** main level.
2. If the Device Mode main level, select the **Test Patterns** option.
3. Select the desired test pattern, from **Dynamic**, **Rainbow**, **Red**, **Green**, **Blue**, **White**, or **Full White**.

Blackout

To black out all output from the ÉPIX D4 IP:

1. Go to the **Device Mode** main level.
2. Select the **Blackout** option.

Settings Configuration

Output Control

The output control settings include the power mode, intensity, dimming curve, and port control settings.

Power Mode

The power mode sets the maximum output intensity of products connected to the ÉPIX D4 IP. **STANDARD** mode limits the intensity to a maximum of **150**. **HI OUTPUT** mode allows the full range of intensity, up to **255**. To set the power mode:

1. Go to the **Output Control** main level.
2. Select the **Power Mode** option.
3. Select from **STANDARD** or **HI OUTPUT**.

Changing the power mode affects the maximum load of each output port of the ÉPIX D4 IP.

- **In STANDARD mode, each port can support up to 10 meters of ÉPIX Line products. Up to 20 ÉPIX Line 10 IP S products, or 10 ÉPIX Line 10 IP products.**
- **In HI OUTPUT mode, each port can support up to 6 meters of ÉPIX Line products. Up to 13 ÉPIX Line 10 IP S products, or 6 ÉPIX Line 10 IP products.**

Intensity

To set the global intensity level of the ÉPIX D4 IP output:

1. Go to the **Output Control** main level.
2. Select the **Intensity** option.
3. Set the intensity, from **000–255**.

Dimming Curve

To set the dimming curve:

1. Go to the **Output Control** main level.
1. Select the **Dim curve** option.
2. Select from **LINEAR**, **SQUARE**, **INV SQUARE**, or **S-CURVE**.

Port Control

To enable or disable one or more output ports or view Port Errors:

1. Go to the **Output Control** main level.
1. Select which port to configure, from **Port 1–4**.
2. Select the configuration, from **ON** (enabled), or **OFF** (disabled).

Fixture ID

To set the KLSTR.ctrl fixture ID of the product:

1. Go to the **Fixture ID** main level.
2. Select the **ID:** option.
3. Set the ID number, from **000001–999999**.

To clear the fixture ID and set the product to **Unassigned**:

1. Go to the **Fixture ID** main level.
2. Select the **Reset to Default** option.

Display Settings

The display menu includes the backlight timer and brightness, as well as the option to invert the display.

Backlight

To set the duration of the display backlight timer (in seconds) or to keep the display on at all times:

1. Go to the **Display** main level.
2. Select the **Backlight** option.
3. Select from **ALWAYS ON**, **10 SEC**, **20 SEC**, or **30 SEC**.

Brightness

To set the brightness level of the display backlight:

1. Go to the **Display** main level.
2. Select the **Brightness** option.
3. Set the backlight brightness, from **0–100%**.

Invert Display

To set the orientation of the display:

1. Go to the **Display** main level.
2. Select the **Inverse** option.
3. Select from **NORMAL** or **INVERSE**.

Information

To view product information, such as the software version, boot-loader version, and hardware version for both the ÉPIX D4 IP systems and the KLSTR.ctrl subsystem, serial number and optional item code, and the RDM UID:

1. Go to the **Info** main level.
2. Turn the encoder to view all of the information.

Factory Reset

To reset the product to factory default settings:

1. Go to the **Factory Reset** main level.
2. Select **Cancel** (do not reset) or **OK** (reset).

Error Codes

Critical Errors

Critical errors will disable all output to prevent the issue from worsening.

In the case of a critical error, power down and restart the product. If the error persists, see the table below for recommended solutions to each error code.

Error Code	Possible Reason	Potential Solution
OVER TEMPERATURE FAULT	Inadequate room around the product for convective cooling	Mount products further apart from each other and/or adjacent surfaces
	PCB malfunction or short	Test PCBs and replace as necessary
	Faulty connection	Check connections between components and restore or replace wiring as necessary
SENSOR FAULT	Sensor malfunction or short	Replace the affected sensor(s)
	Faulty connection	Check connections between components and restore or replace wiring as necessary
KLSTR FAULT	Application error	Restart application
		Reinstall application
	Subsystem error	Restart the product
	Faulty master PCB	Replace master PCB

Port Errors

A port error will disable the affected port to prevent the issue from worsening.

When a port error is present, the product will display the Port State Screen on startup. Press the encoder to enter the Port Control menu and see further details on the error(s).

See the table below for recommended solutions to each error code.

Error Code	Possible Reason	Potential Solution
OVERLOAD	Too many ÉPIX LINE products connected	Remove ÉPIX LINE products from the port's daisy chain
SHORT	The port has a short circuit	Replace the port
ERROR	Damaged or faulty port	Replace the port
	Faulty connection	Check connections between components and restore or replace wiring as necessary

To restore port function after correcting the issue:

1. Access the Port Control menu.
2. Select the port with the error.
3. Select the **RECOVER?** option.

If the error has not been corrected, the error message will reappear.

5. Maintenance

Product Maintenance

Dust build-up reduces light output performance and can cause overheating. This can lead to reduction of the light source's life and/or mechanical wear. To maintain optimum performance and minimize wear, clean each lighting product at least twice a month. However, be aware that usage and environmental conditions could be contributing factors to increase the cleaning frequency.

To clean the product, follow the instructions below:

1. Unplug the product from power.
2. Wait until the product is at room temperature.
3. Use a vacuum (or dry compressed air) and a soft brush to remove dust collected on the external surface/vents.
4. Clean all transparent surfaces with a mild soap solution, ammonia-free glass cleaner, or isopropyl alcohol.
5. Apply the solution directly to a soft, lint free cotton cloth or a lens cleaning tissue.
6. Softly drag any dirt or grime to the outside of the transparent surface.
7. Gently polish the transparent surfaces until they are free of haze and lint.

Always dry the transparent surfaces carefully after cleaning them.

Torque Measurements

To maintain the IP rating when reassembling the product, use the given torque measurements for each of the following screws and bolts:

Fixture Parts	Torque Rating (Kgf.cm)	Torque Rating (lbf.in)
Screws inside feet	15.3	13.3
Base screws around outside (not the feet)	16.3	14.16
Base screws in middle	35.6	90.9
Omega bracket holder	12.2	10.6
Front and rear base cover	25.5	22.1
Screws around power and data ports	3.5	3
Fuse	7.1	6.1
Center of yoke plate	25.5	22.1
Arm cover screws	25.5	22.1
Allen Key screws next to front lens	25.5	22.1
Allen Key screws holding in front lens cover	12.2	10.6
Allen Key screws next to heat pipes on the back	25.5	22.1
Allen Key screws head covers	25.5	22.1

Vacuum Test Measurements

Use the IP Tester from Chauvet Professional to ensure the product has been reassembled correctly by following the information below:

Parameters	Values
Method	Positive
Test pressure	2.18 kPa
Test duration	60 seconds
PASS state leak pressure	<0.02 kPa

6. Technical Specifications

Dimensions and Weight

Length	Width (w/ Rack Ears)	Width (w/o Rack Ears)	Height	Weight
13.65 in (346.8 mm)	18.94 in (481 mm)	11.61 in (295 mm)	3.78 in (96 mm)	18.8 lb (8.53 kg)

Note: Dimensions in inches are rounded.

Power

Power Supply Type	Range	Voltage Selection
Switching (internal)	100 to 240 VAC, 50/60 Hz	Auto-ranging

Parameter	100 V, 60 Hz	120 V, 60 Hz	208 V, 60 Hz	230 V, 50 Hz	240 V, 50 Hz
Consumption	1,106 W	1,085 W	1,060 W	1,061 W	1,055 W
Operating Current	11.08 A	9.07 A	5.15 A	4.69 A	4.47 A
Power Linking Current (products)	12 A (0 products)	12 A (0 products)	12 A (2 products)	12 A (2 products)	12 A (2 products)

Power I/O	U.S./Worldwide	UK/Europe
Power Input Connector	Seetronic Powerkon IP65	Seetronic Powerkon IP65
Power Output Connector	Seetronic Powerkon IP65	Seetronic Powerkon IP65
Power Cable plug	Edison	Local plug

Thermal

Maximum External Temperature	Cooling System
113 °F (45 °C)	Convection

ÉPIX Product Output

Output Connector	Output Voltage	ÉPIX Line Product	Maximum Load per port	LEDs per product
4-pin XLR (IP65) x4	48 VDC	ÉPIX Line 10 IP	10 products (STANDARD) 6 products (HI OUTPUT)	100
		ÉPIX Line 10 IP S	20 products (STANDARD) 13 products (HI OUTPUT)	50
		Any combination up to 1000 LEDs per port (STANDARD) or 600 LEDs per port (HI OUTPUT)		

Maximum Cable Lengths

Parameter	Shielded	Unshielded
From Drive to 1st product	65 ft (20 m)	150 ft (45 m)
Between products	60 ft (18 m)	100 ft (30 m)
Total from Drive through all products	210 ft (64 m)	300 ft (91 m)

Art-Net™/sACN

I/O Connector	Channel Range (per ÉPIX Line product)	Universes
3 Seetronic Etherkon IP65	2 or 18 (total), 3, 6, 12, 15, 30, 60, 150, or 300	1,000,000

Ordering

Product Name	Item Name	Item Code	UPC Number
ÉPIX D4 IP	EPIXD4IP	99082561	781462229092

UL 60950-1
CSA C22.2 No. 60950-1
E113093-1110, E113093-1125

Contact Us

General Information	Technical Support
Chauvet World Headquarters	
Address: 3360 Davie Rd., Suite 509 Davie, FL 33314 Voice: (954) 577-4455 Fax: (954) 929-5560 Toll Free: (800) 762-1084	Voice: (844) 393-7575 Fax: (954) 756-8015 Email: chauvetcs@chauvetlighting.com Website: www.chauvetprofessional.com
Chauvet U.K.	
Address: Pod 1 EVO Park Little Oak Drive, Sherwood Park Nottinghamshire, NG15 0EB UK Voice: +44 (0) 1773 511115 Fax: +44 (0) 1773 511110	Email: UKtech@chauvetlighting.eu Website: www.chauvetprofessional.eu
Chauvet Benelux	
Address: Vaartlaan 9 9800 Deinze Belgium Voice: +32 9 388 93 97	Email: BNLtech@chauvetlighting.eu Website: www.chauvetprofessional.eu
Chauvet France	
Address: 3, Rue Ampère 91380 Chilly-Mazarin France Voice: +33 1 78 85 33 59	Email: FRtech@chauvetlighting.fr Website: www.chauvetprofessional.eu
Chauvet Germany	
Address: Bruno-Bürgel-Str. 11 28759 Bremen Germany Voice: +49 421 62 60 20	Email: DEtech@chauvetlighting.de Website: www.chauvetprofessional.eu
Chauvet Mexico	
Address: Av. de las Partidas 34 - 3B (Entrance by Calle 2) Zona Industrial Lerma Lerma, Edo. de México, CP 52000 Voice: +52 (728) 690-2010	Email: servicio@chauvet.com.mx Website: www.chauvetprofessional.mx

Warranty & Returns

For warranty terms and conditions and return information, please visit our website.

For customers in the United States and Mexico: www.chauvetlighting.com/warranty-registration.

For customers in the United Kingdom, Republic of Ireland, Belgium, the Netherlands, Luxembourg, France, and Germany: www.chauvetlighting.eu/warranty-registration.