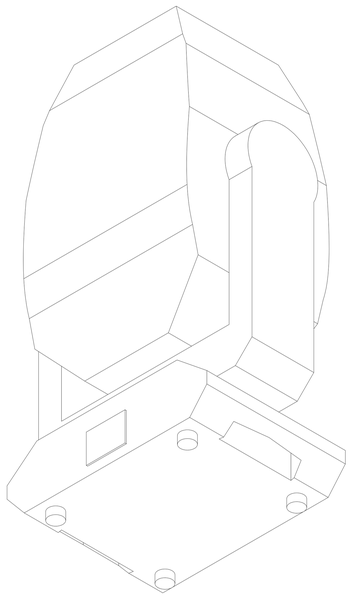

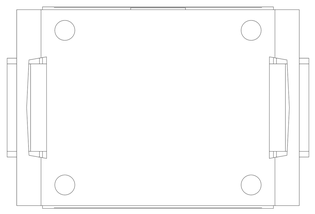

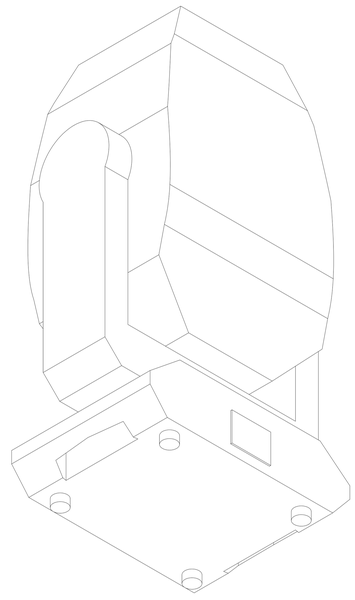

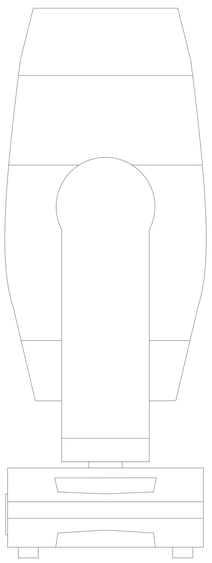

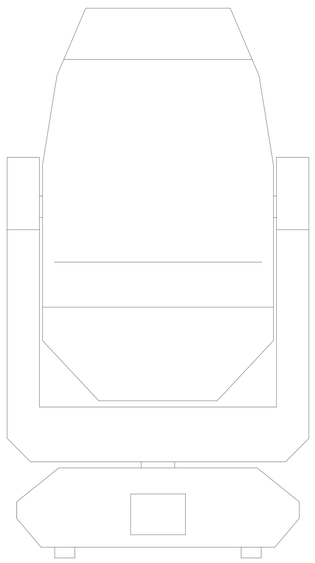

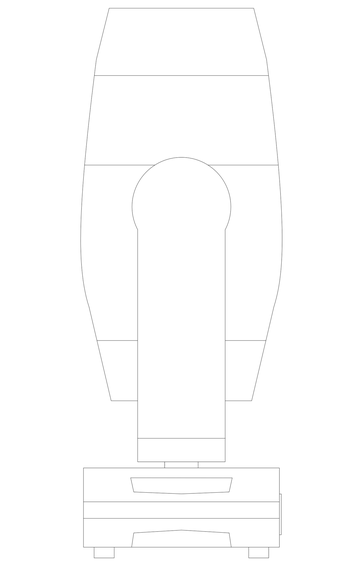

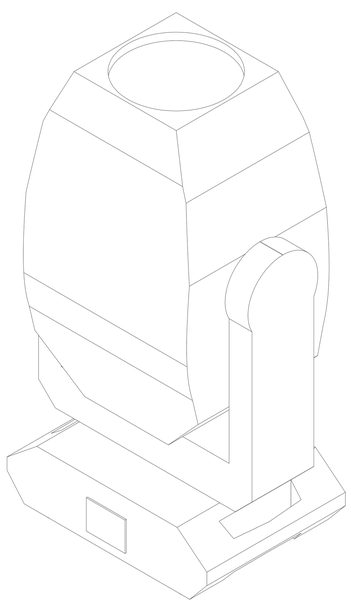

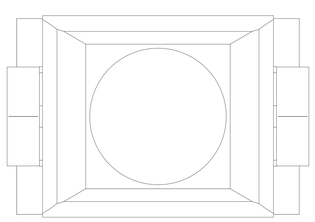

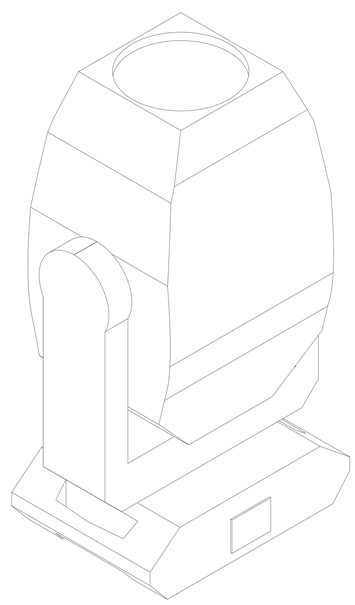

DRAWN C. Henry	DATE 9/29/2025	TITLE Maverick Force X Profile

© Chauvet & Sons, LLC (2025)
All Product specifications and dimensions are subject to change without notice.

SCALE 1 : 5

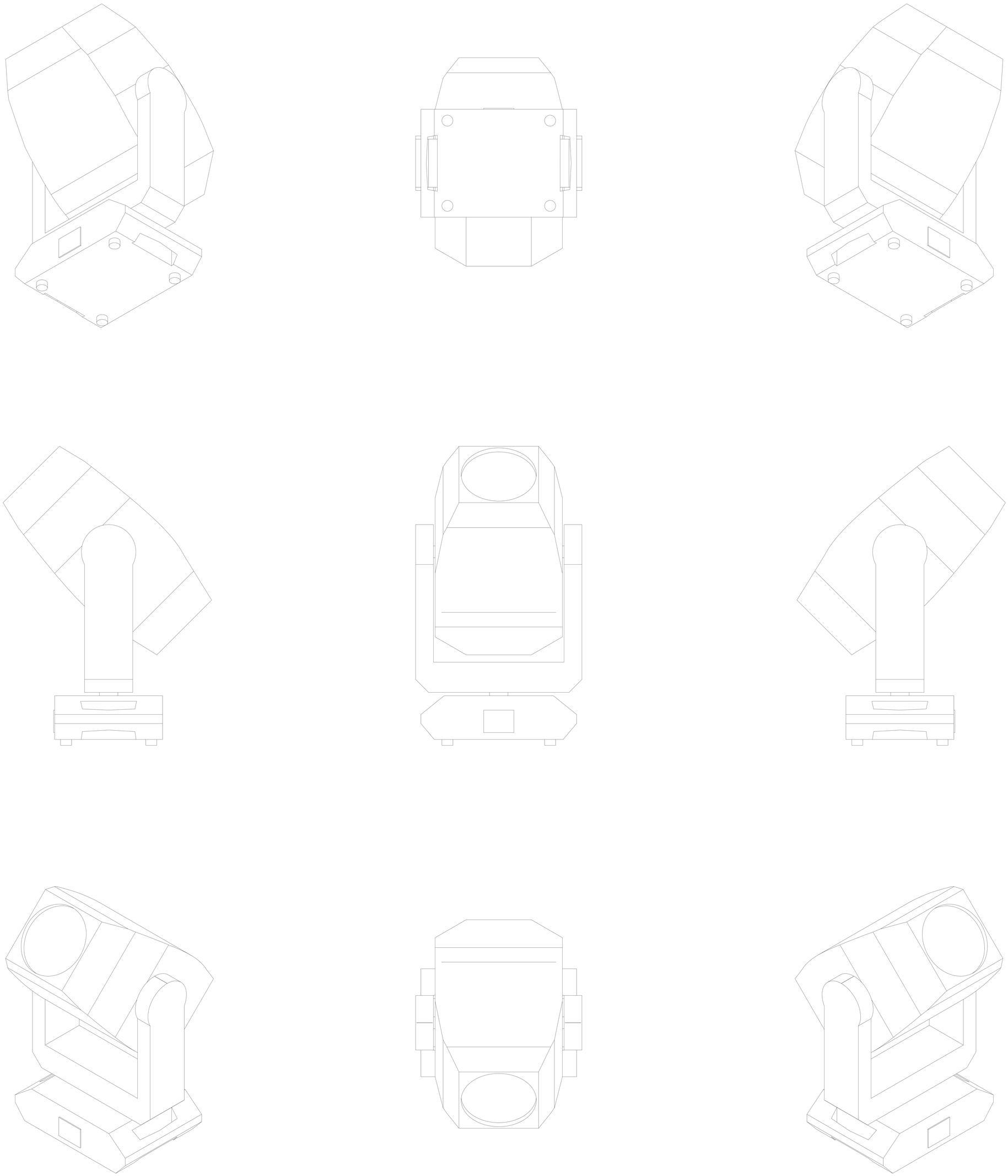

DRAWN	DATE	TITLE
C. Henry	04/09/2025	Maverick Force X Profile

© Chauvet & Sons, LLC (2025)
All Product specifications and dimensions are subject to change without notice

CHAUVET PROFESSIONAL

SCALE 1 : 1

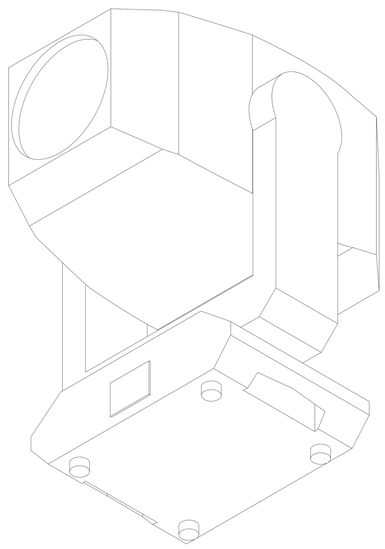

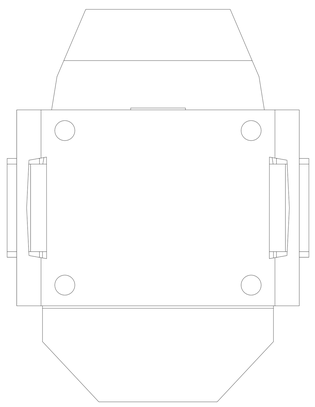

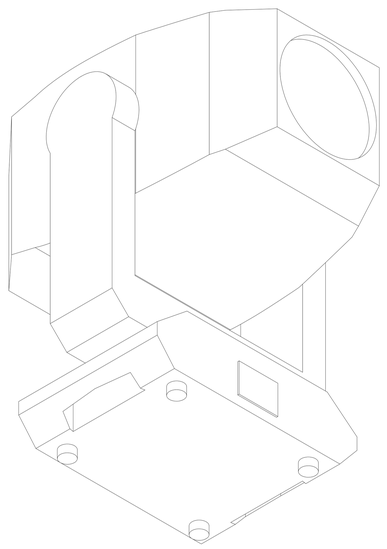

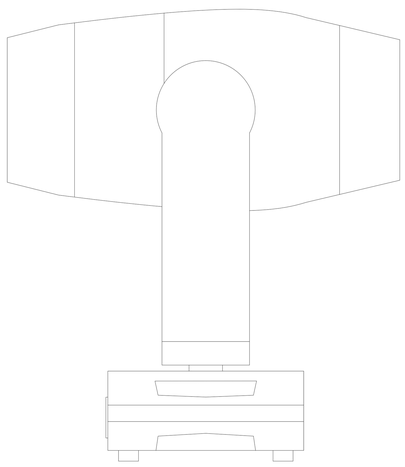

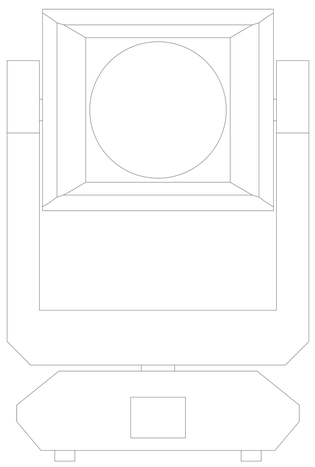

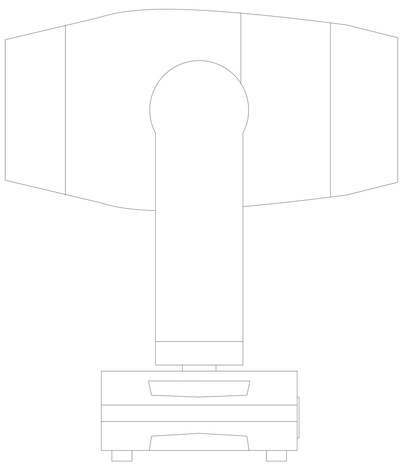

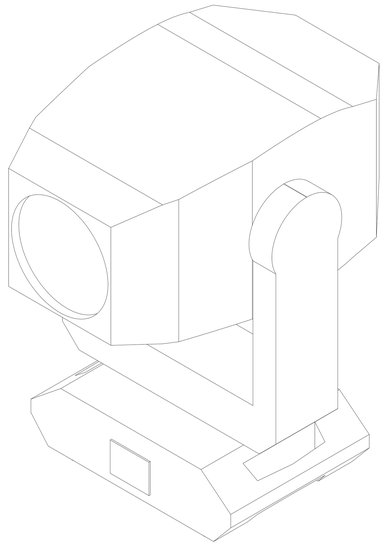

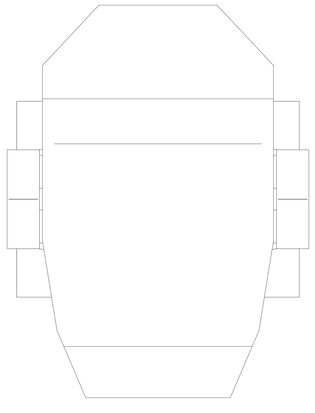

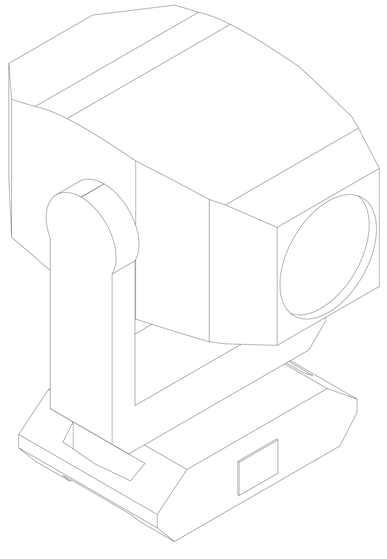

DRAWN C. Henry	DATE 9/23/2025	TITLE Maverick Force X Profile

© Chauvet & Sons, LLC (2025)
All Product specifications and dimensions are subject to change without notice

CHAUVET PROFESSIONAL

SCALE 1 : 1.1