COLORADO PXL BAR 16

User Manual

Model ID: COLORADOPXLBAR16

CHAUVET PROFESSIONAL

Edition Notes

The COLORado PXL Bar 16 User Manual includes a description, safety precautions, installation, programming, operation, and maintenance instructions for the COLORado PXL Bar 16 as of the release date of this edition.

Trademarks

Chauvet, Chauvet Professional, the Chauvet logo, and Colorado are registered trademarks or trademarks of Chauvet & Sons, LLC (d/b/a Chauvet and Chauvet Lighting) in the United States and other countries. Other company and product names and logos referred to herein may be trademarks of their respective companies.

Copyright Notice

The works of authorship contained in this manual, including, but not limited to, all designs, text, and images are owned by Chauvet.

Electronically published by Chauvet in the United States of America.

Manual Use

Chauvet authorizes its customers to download and print this manual for professional information purposes only. Chauvet expressly prohibits the usage, copy, storage, distribution, modification, or printing of this manual or its content for any other purpose without written consent from Chauvet.

Document Printing

For best results, print this document in color, on letter size paper (8.5 x 11 in), double-sided. If using A4 paper (210 x 297 mm), configure the printer to scale the content accordingly.

Intended Audience

Any person installing, operating, and/or maintaining this product should completely read through the guide that shipped with the product, as well as this manual, before installing, operating, or maintaining this product.

Disclaimer

Chauvet believes that the information contained in this manual is accurate in all respects. However, Chauvet assumes no responsibility and specifically disclaims any and all liability to any party for any loss, damage, or disruption caused by any errors or omissions in this document, whether such errors or omissions result from negligence, accident or any other cause. Chauvet reserves the right to revise the content of this document without any obligation to notify any person or company of such revision, however, Chauvet has no obligation to make, and does not commit to make, any such revisions. Download the latest version from www.chauvetprofessional.com.

Document Revision

Go to www.chauvetprofessional.com for the latest version.

Revision	Date	Description
9	09/2023	Updated DMX chart for V1.230522 fixture firmware/ added revision log

TABLE OF CONTENTS

1. Before You Begin

What Is Included

- COLORado PXL Bar 16
- Seetronic Powerkon IP65 power cable
- 2 Omega brackets with mounting hardware
- Quick Reference Guide

Claims

Carefully unpack the product immediately and check the container to make sure all the parts are in the package and are in good condition.

If the box or the contents (the product and included accessories) appear damaged from shipping, or show signs of mishandling, notify the carrier immediately, not Chauvet. Failure to report damage to the carrier immediately may invalidate a claim. In addition, keep the box and contents for inspection.

For other issues, such as missing components or parts, damage not related to shipping, or concealed damage, file a claim with Chauvet within 7 days of delivery.

Manual Conventions

Convention	Meaning
1–512	A range of values
50/60	A set of values of which only one can be chosen
<SET>	A button on the product's control panel
Settings	A product function or a menu option

Symbols

Symbol	Meaning
	Electrical warning. Not following these instructions may cause electrical damage to the product, accessories, or the user.
	Critical installation, configuration, or operation information. Not following these instructions may make the product not work, cause damage to the product, or cause harm to the operator.
	Important installation or configuration information. The product may not function correctly if this information is not used.
	Useful information.

Any reference to data or power connections in this manual assumes the use of Seetronic IP-rated cables.

The term "DMX" used throughout this manual refers to the USITT DMX512-A digital data transmission protocol.

Safety Notes

Read all the following safety notes before working with this product. These notes contain important information about the installation, usage, and maintenance of this product.

This product contains no user-serviceable parts. Any reference to servicing in this User Manual will only apply to properly trained, certified technicians. Do not open the housing or attempt any repairs.

All applicable local codes and regulations apply to proper installation of this product.

- The luminaire is intended for professional use only.
- If the external flexible cable or cord of this luminaire is damaged, it shall be replaced by a special cord or cord exclusively available from the manufacturer or its service agent.
- The light source contained in this luminaire shall only be replaced by the manufacturer or its service agent or a similar qualified person.
- **CAUTION:**
  - This product's housing may be hot when operating. Mount this product in a location with adequate ventilation, at least 20 in (50 cm) from adjacent surfaces.
  - When transferring the product from extreme temperature environments, (e.g., cold truck to warm humid ballroom) condensation may form on the internal electronics of the product. To avoid causing a failure, allow the product to fully acclimate to the surrounding environment before connecting it to power.
  - Flashing light is known to trigger epileptic seizures. User must comply with local laws regarding notification of strobe use.
- **ALWAYS:**
  - Disconnect from power before cleaning the product or replacing the fuse.
  - When using an IP65-rated product in an outdoor environment, use IP65- (or higher) rated power and data cable.
  - Replace and secure IP-rated protective covers to all power, data, USB, or other ports when not in use.
  - Replace the fuse with the same type and rating.
  - Use a safety cable when mounting this product overhead.
  - Connect this product to a grounded and protected circuit.
- **DO NOT:**
  - Open this product. It contains no user-serviceable parts.
  - Look at the light source when the product is on.
  - Leave any flammable material within 50 cm of this product while operating or connected to power.
  - Connect this product to a dimmer or rheostat.
  - Operate this product if the housing, lenses, or cables appear damaged.
  - Submerge this product (adhere to standards for the published IP rating). Regular outdoor operation is fine.
  - Permanently install outdoors in locations with extreme environmental conditions. This includes, but is not limited to:
    - Exposure to a marine/saline environment (within 3 miles of a saltwater body of water).
    - Locations where normal temperatures exceed the temperature ranges in this manual.
    - Locations that are prone to flooding or being buried in snow.
    - Other areas where the product will be subject to extreme radiation or caustic substances.
- ONLY use the handles or the hanging/mounting brackets to carry this product.
- The maximum ambient temperature is 113 °F (45 °C). Do not operate this product at higher temperatures.
- The minimum startup temperature is -4°F (-20°C). Do not start the product at lower temperatures.
- The minimum ambient temperature is -22°F (-30°C). Do not operate the product at lower temperatures.
- To eliminate unnecessary wear and improve its lifespan, during periods of non-use completely disconnect the product from power via breaker or by unplugging it.
- In the event of a serious operating problem, stop using immediately.

If a Chauvet product requires service, contact Chauvet Technical Support.

FCC Statement of Compliance

This device complies with Part 15 Part B of the FCC rules. Operation is subject to the following two conditions:

1. This device may not cause harmful interference, and
2. This device must accept any interference received, including interference that may cause undesired operation.

This equipment has been tested and found to comply with the limits for a Class B digital device, pursuant to Part 15 of the FCC Rules. These limits are designed to provide reasonable protection against harmful interference in a residential installation. This equipment generates uses and can radiate radio frequency energy and, if not installed and used in accordance with the instructions, may cause harmful interference to radio communications. However, there is no guarantee that interference will not occur in a particular installation. If this equipment does cause harmful interference to radio or television reception, which can be determined by turning the equipment off and on, the user is encouraged to try to correct the interference by one or more of the following measures:

- Reorient or relocate the receiving antenna.
- Increase the separation between the equipment and receiver.
- Connect the equipment into an outlet on a circuit different from that to which the receiver is connected.
- Consult the dealer or an experienced radio/TV technician for help.

Any changes or modifications not expressly approved by the party responsible for compliance could void the user's authority to operate the equipment.

RF Exposure Warning for North America and Australia

Warning! This equipment complies with FCC radiation exposure limits set forth for an uncontrolled environment. This equipment should be installed and operated with a minimum distance of 20cm between the radiator and the user. This transmitter must not be co-located or operating in conjunction with any other antenna or transmitter.

Expected LED Lifespan

Over time, use and heat will gradually reduce LED brightness. Clustered LEDs produce more heat than single LEDs, contributing to shorter lifespans if always used at full intensity. The average LED lifespan is 40,000 to 50,000 hours. To extend LED lifespan, maintain proper ventilation around the product, and limit the overall intensity.

2. Introduction

Description

COLORado PXL Bar 16 is a motorized, outdoor-ready tilting batten with capabilities to zoom for tight and wide pixel-mappable looks. This bright, moving pixel bar also features seamless edge-to-edge mounting and includes virtual gobo and movement macros with separate foreground and background color control for more design options than ever before. Slotted Omega brackets make it quick and easy to hang the fixture on truss. The COLORado PXL Bar 16 can also be positioned on the ground, which allows for a variety of different light angles.

Features

- IP65-rated motorized tilting batten with (16) 45W RGBW LEDs with a 5.8° to 48.8° zoom range maintains pixel pitch between fixtures
- Quiet and quick operation of 200° tilt and two-section zoom
- Fully pixel mappable
- Several built-in effects, including virtual gobos and movement macros with foreground and background color control for easy pixel animation effects
- DMX, sACN, Art-Net, and Kling-Net control for full flexibility
- RDM enabled for remote addressing and troubleshooting
- 5.8° to 48.8° zoom range for variable beam sizes
- TRUE1-compatible power input/output ports
- IP65-rated 5-pin DMX and TCP/IP input/output ports
- IP65-rated USBc software upload port
- Slotted Omega brackets for easy hanging on truss

Product Overview

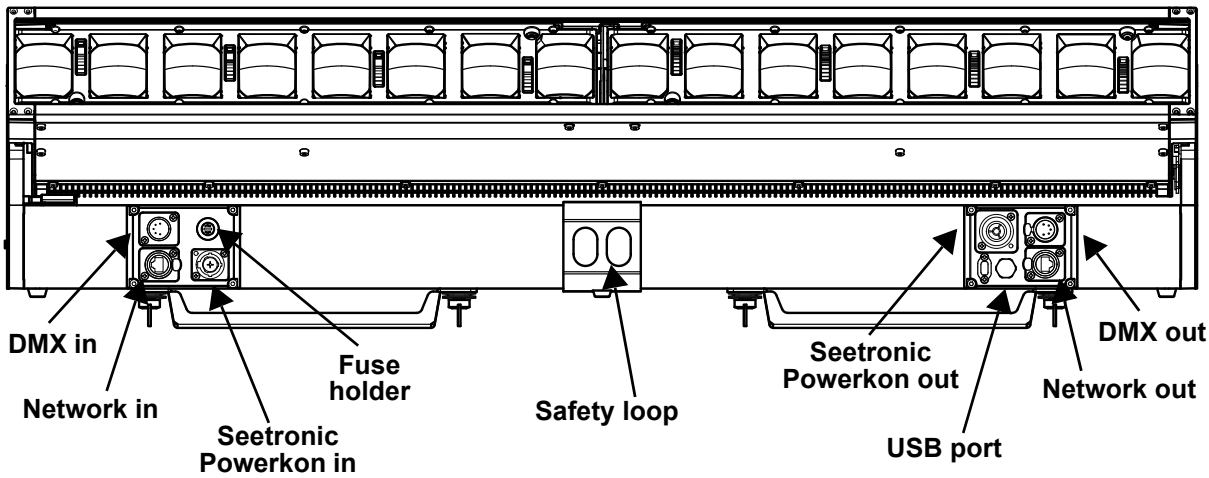

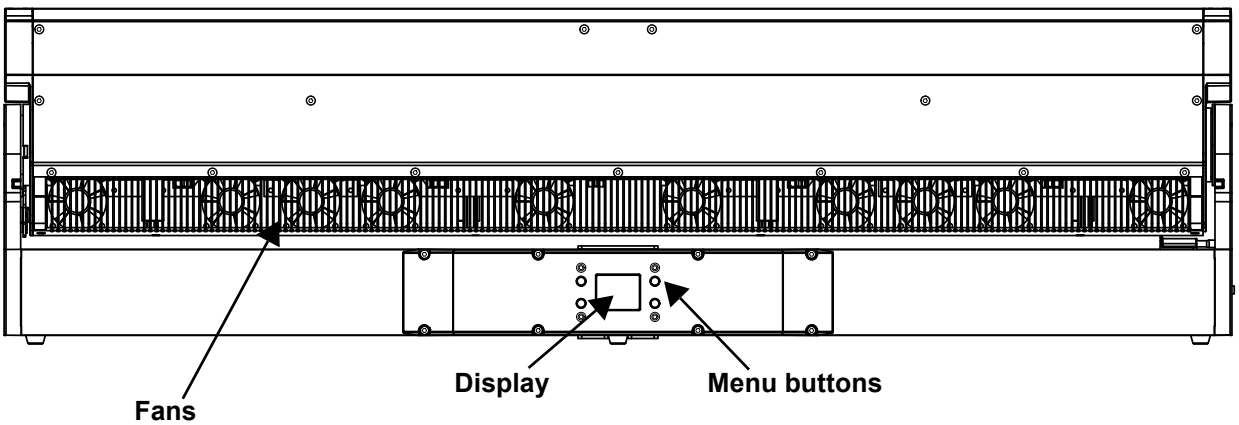

Product Dimensions

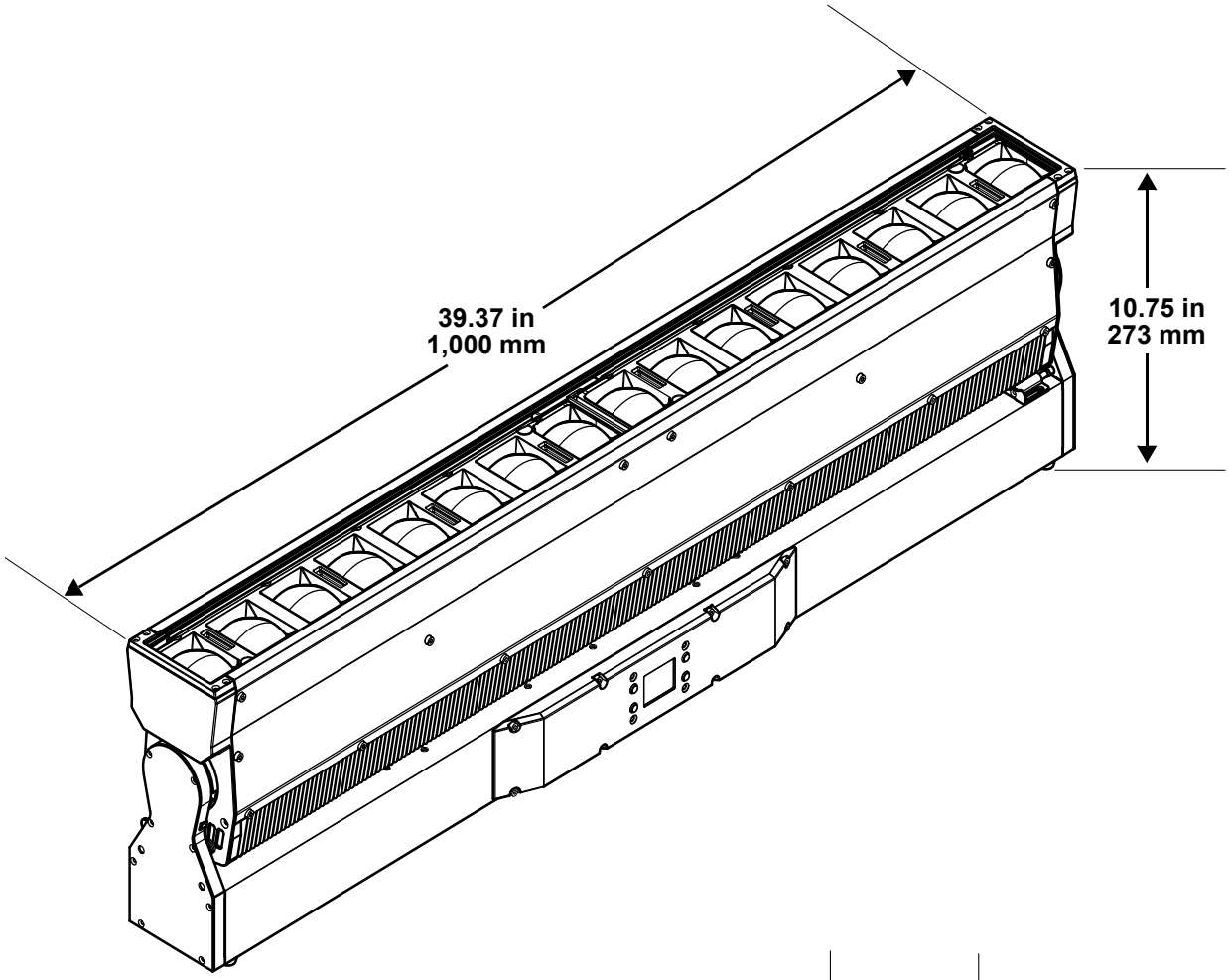

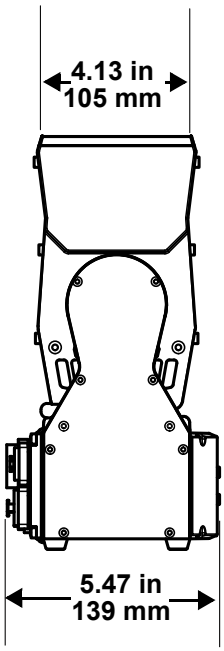

3. Setup

AC Power

Each COLORado PXL Bar 16 has an auto-ranging power supply that works with an input voltage range of 100 to 240 VAC, 50/60 Hz. To determine the power requirements for each COLORado PXL Bar 16, refer to the label affixed to the product or to the Technical Specifications chart in this manual.

The listed current rating indicates the maximum current draw during normal operation. For more information, download Sizing Circuit Breakers from the Chauvet website: www.chauvetprofessional.com.

- **Always connect the product to a protected circuit (a circuit breaker or fuse). Make sure the product has an appropriate electrical ground to avoid the risk of electrocution or fire.**
- **To eliminate unnecessary wear and improve its lifespan, during periods of non-use completely disconnect the product from power via breaker or by unplugging it.**

Never connect the product to a rheostat (variable resistor) or dimmer circuit, even if the rheostat or dimmer channel serves only as a 0 to 100% switch.

AC Plug

The COLORado PXL Bar 16 comes with a power input cord terminated with a Seetronic Powerkon A connector on one end and an Edison plug on the other end (U.S. market). If the power input cable that came with the product has no plug, or if the plug needs to be changed, use the table below to wire the new plug.

Connection	Wire (U.S.)	Wire (Europe)	Screw Color
AC Live	Black	Brown	Yellow or Brass
AC Neutral	White	Blue	Silver
AC Ground	Green/Yellow	Green/Yellow	Green

Power Linking

This product comes with a power input cord. Power-linking cables are available from Chauvet for purchase.It is possible to power link COLORado PXL Bar 16 products. See the table below for the current draw at each voltage and frequency:

	100 V, 60 Hz	120 V, 60 Hz	208 V, 60 Hz	230 V, 50 Hz	240 V, 50 Hz
Current Draw	8.35 A	6.60 A	3.82 A	3.48 A	3.50 A

Never exceed 12 A on a single circuit. Power-linking cables can be purchased separately

- **To preserve the IP65 rating and the warranty of this product, Seetronic Powerkon cables must be used.**
- **Insert the attached IP65-rated plugs into the corresponding power/data connections when not in use.**

DMX Linking

The COLORado PXL Bar 16 can be linked to a DMX controller using a 5-pin DMX connection. If using other DMX-compatible products with this product, each can be controlled individually with a single DMX controller.

DMX Personalities

The COLORado PXL Bar 16 uses DMX, Art-Net™, sACN, and Kling-Net for its control personalities:

Single Mode	Dual Mode Movement	Dual Mode Pixels
Basic (20 channels)	**Basic** (8 channels)	**Basic** (48 channels)
Standard (84 channels)	**Standard** (20 channels)	**Standard** (64 channels)
Advanced (154 channels)	**Advanced** (26 channels)	**Advanced** (128 channels)
Tour (186 channels)	**Basic2** (7 channels)	Uses DMX, Art-Net™, sACN, or Kling-Net
Basic2 (19 channels)	Uses DMX, Art-Net™, or sACN	
Uses DMX, Art-Net™, or sACN		

For more information about DMX standards, Master/Slave connectivity, or the DMX cables needed to link this product to a DMX controller, download the DMX Primer from the Chauvet website: www.chauvetprofessional.com.

Remote Device Management

Remote Device Management (RDM) is a standard for allowing DMX-enabled devices to communicate bi-directionally along existing DMX cabling. Check the DMX controller's User Manual or with the manufacturer, as not all DMX controllers have this capability. The COLORado PXL Bar 16 supports RDM protocol that allows feedback to make changes to menu map options.

Master/Slave Connectivity

The Master/Slave mode allows an COLORado PXL Bar 16 (the master) to control one or more COLORado PXL Bar 16 products (the slaves) without a DMX controller. One COLORado PXL Bar 16 becomes the master when running an auto program, or by being in Static mode.

Each slave's control panel must be configured to operate in Slave mode. During Master/Slave operation, the slaves will operate in unison with the master.

DO NOT connect a DMX controller to products operating in Master/Slave mode. The DMX controller signals may interfere with the signals from the master.

- **The Operation section of this manual provides detailed instructions on how to configure the master and slaves.**
- **For more information about DMX standards, or the DMX cables needed to link this product to a DMX controller, download the DMX Primer from the Chauvet website: www.chauvetprofessional.com.**

USB Software Update

The COLORado PXL Bar 16 allows for software updates with a USB device using the built-in USB port. To update the software using a USB flash drive, do the following:

1. Power on the product, and plug the flash drive into the USB port.
2. Once the flash drive has been detected, the message "**USB UPDATE**" will be displayed. Select **YES**.
3. The next screen will show the software versions available for this fixture on the USB drive. For multiple versions of the software for the same fixture, use <**UP**> or <**DOWN**> to select the desired version. Press <**ENTER**>.
4. The "**USB UPDATE**" screen will re-appear. Select **YES**.

It is possible to update multiple units with the USB if they are daisy chained via DMX.

5. The upgrade will start. **DO NOT** turn off the power or disconnect the USB while the USB LED is still blinking during the process. The screen display will read: "**USB Update Wait**". The update can take several minutes to complete.
   - When the USB firmware is done uploading, in some fixtures, the display will change to: "**DO NOT UNPLUG, UPDATING**".
6. When the update is completed, the fixture will automatically reboot.
7. Go to Fixture Information on the product's menu map and confirm the firmware revision.
8. When the boot-up process is finished, restart the product.

- **Place the .chl file in the root directory of the USB drive.**
- **The product's USB port supports up to 32GB capacity and only works with FAT32 file format.**

Turning off the power or removing the USB while the USB LED is still blinking during the update will cause partial or total firmware failure in the targeted fixture(s). If this occurs, the user will need the UPLOAD 08 device to fix this. Please contact Chauvet regarding this device.

Mounting

Before mounting the product, read and follow the safety recommendations indicated in the Safety Notes. For the Chavet Professional line of mounting clamps, go to http://trusst.com/products/.

Orientation

Always mount this product in a safe position, making sure there is adequate room for ventilation, configuration, and maintenance.

Rigging

Chauvet recommends using the following general guidelines when mounting this product.

- Before deciding on a location for the product, always make sure there is easy access to the product for maintenance and programming.
- Make sure that the structure onto which the product is being mounted can support the product's weight (see the Technical Specifications for weight information).
- When mounting the product overhead, always use a safety cable. Mount the product securely to a rigging point, whether an elevated platform or a truss.
- When rigging the product onto a truss, use a mounting clamp of appropriate weight capacity.
- When power linking multiple products, mount the products close enough for power-linking cables to reach.

Procedure

The COLORado PXL Bar 16 comes with a bracket to which the user can attach a mounting clamp directly. Mounting clamps are sold separately. Make sure the clamps are capable of supporting the weight of this product. For the Chauvet Professional line of mounting clamps, go to http://www.trusst.com/products.

Mounting Diagram

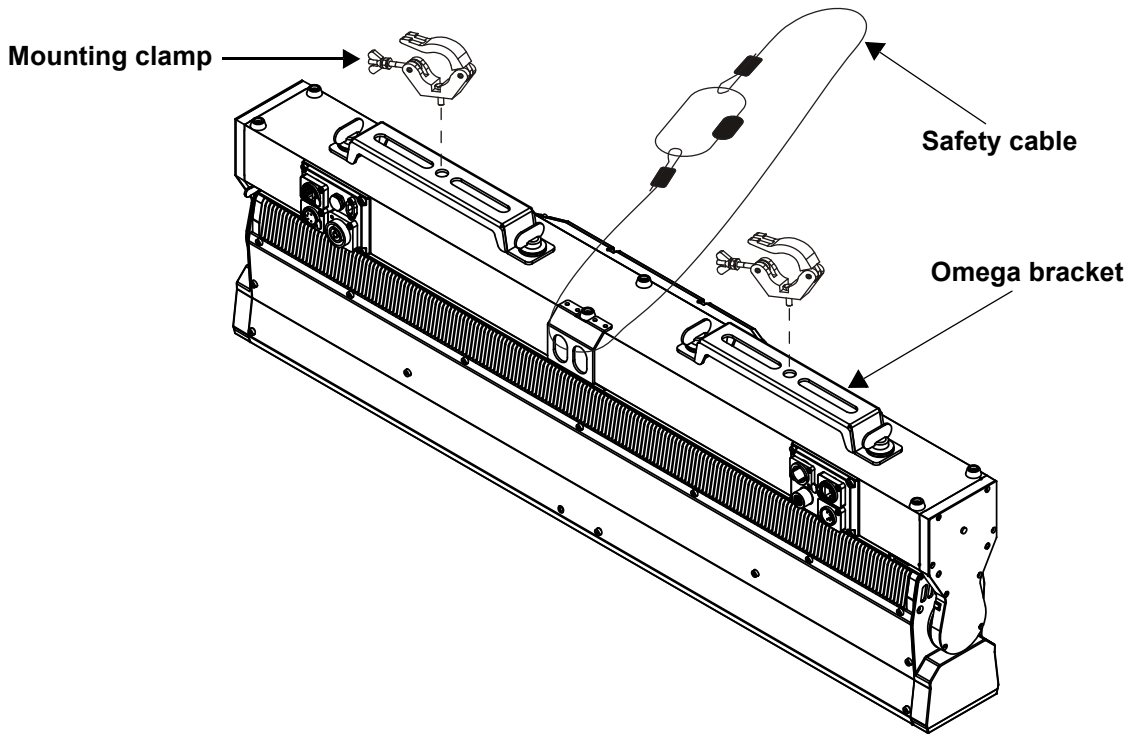

4. Operation

Control Panel Operation

Button	Function
<MENU>	Exits from the current menu or function
<ENTER>	Enables the currently displayed menu or sets the currently selected value in to the current function
<UP>	Navigates upward through the menu list or increases the numeric value when in a function
<DOWN>	Navigates downward through the menu list or decreases the numeric value when in a function

Protocol Configuration

The COLORado PXL Bar 16 can be set to respond to DMX, Art-Net™, sACN, Kling-Net, or a combination of these protocols. The protocol configuration must be set for the product to respond correctly to the controller(s).

Control Personalities

The following control personalities are available on the COLORado PXL Bar 16:

Single Control Mode	Dual Control Mode Movement	Dual Control Mode Pixels
Basic (20 channels)	**Basic** (8 channels)	**Basic** (48 channels)
Standard (84 channels)	**Standard** (20 channels)	**Standard** (64 channels)
Advanced (154 channels)	**Advanced** (26 channels)	**Advanced** (128 channels)
Tour (186 channels)	**Basic2** (7 channels)	Uses DMX, Art-Net™, sACN, or Kling-Net
Basic2 (19 channels)	Uses DMX, Art-Net™, or sACN	
Uses DMX, Art-Net™, or sACN		

Single Control

In Single Control mode, the COLORado PXL Bar 16 is controlled by a single protocol input. Choose from DMX, Art-Net™, or sACN. In this mode, the four personalities available are: **Basic** (20 channels), **Standard** (84 channels), **Advanced** (154 channels), **Tour** (186 channels), and **Basic2** (19 channels).

Single Control Protocol

To select the Single Control protocol, follow the instructions below:

1. Go to the **Address** main level.
2. Select **Single Control**.
3. Choose from the following: **DMX**, **ArtNet**, or **sACN**.

Single Control Personality

To select the Single Control personality, do the following:

1. Set the protocol.
2. Select **Personality**.
3. Choose from the following: **Basic** (20 channels), **Standard** (84 channels), **Advanced** (154 channels), **Tour** (186 channels), or **Basic2** (19 channels).

Single Control Start Address

To set the starting address of the Single Control mode, follow the instructions below:

1. Set the protocol.
2. Select **Start Address**.
3. Set the desired starting address, from **0** to **512**.

Single Control Universe

To set the universe address of the Single Control mode when using Art-Net™ or sACN, do the following:

1. Set the protocol.
2. Select **Universe**.
3. Set the desired universe address, from **0** to **255**.

Dual Control

In Dual Control mode, the COLORado PXL Bar 16 is controlled by two protocol inputs: one controls the movement, zoom, dimmers, and shutters, whereas the other one controls the individual LED output.

Dual Control Movement

The Movement protocol controls the movement of the bar and zoom, and the dimmers and shutters. Choose from DMX, Art-Net™, or sACN. In this mode, the three personalities available are: **Basic** (8 channels), **Standard** (20 channels), **Advanced** (26 channels), and **Basic2** (7 channels).

Dual control movement protocol

To select the Dual Control Movement protocol, follow the instructions below:

1. Go to the **Address** main level.
2. Select **Dual Control**.
3. Select **Movement**.
4. Choose from the following: **DMX**, **ArtNet**, or **sACN**.

Dual control movement personality

To select the Dual Control Movement personality, do the following:

1. Set the protocol.
2. Select **Personality**.
3. Choose from the following: **Basic** (8 channels), **Standard** (20 channels), **Advanced** (26 channels), or **Basic2** (7 channels).

Dual control movement start address

To set the starting address of the Dual Control Movement mode, follow the instructions below:

1. Set the protocol.
2. Select **Start Address**.
3. Set the desired starting address, from **0** to **512**.

Dual control movement universe

To set the universe address of the Dual Control Movement mode when using Art-Net™ or sACN, do the following:

1. Set the protocol.
2. Select **Universe**.
3. Set the desired universe address, from **0** to **255**.

Dual Control Pixels

The Pixels protocol controls the individual output of the LEDs. Choose from DMX, Art-Net™, sACN, or Kling-Net. In this mode, the three personalities available are: **Basic** (48 channels), **Standard** (64 channels), and **Advanced** (128 channels).

Dual control pixels protocol

To select the Dual Control Pixels protocol, follow the instructions below:

1. Go to the **Address** main level.
2. Select **Dual Control**.
3. Select **Pixels**.
4. Choose from the following: **DMX**, **ArtNet**, **sACN**, or **Kling-Net**.

Dual control pixels personality

To select the Dual Control Pixels personality, do the following:

1. Set the protocol.
2. Select **Personality**.
3. Choose from the following: **Basic** (48 channels), **Standard** (64 channels), or **Advanced** (128 channels).

Dual control movement start address

To set the starting address of the Dual Control Pixels mode, follow the instructions below:

1. Set the protocol.
2. Select **Start Address**.
3. Set the desired starting address, from **0** to **512**.

Dual control movement universe

To set the universe address of the Dual Control Pixels mode when using Art-Net™ or sACN, do the following:

1. Set the protocol.
2. Select **Universe**.
3. Set the desired universe address, from **0** to **255**.

Menu Map

Refer to the COLORado PXL Bar 16 product page on www.chauvetprofessional.com for the latest menu map.

Programming Levels						Description
Address						**Address Main Level**
Address	**Single Control**		**DMX**	**Personality**	**Basic**	Sets the DMX personality (see Control Personalities)
					Standard	
					Advanced	
					Tour	
					Basic2	
				Start Address	**0–512**	Sets the DMX starting address
			ArtNet	**Personality**	**Basic**	Sets the Art-Net™ personality (see Control Personalities)
					Standard	
					Advanced	
					Tour	
					Basic2	
				Start Address	**0–512**	Sets the Art-Net™ starting address
				Universe	**0–255**	Sets the Art-Net™ universe
			sACN	**Personality**	**Basic**	Sets the sACN personality (see Control Personalities)
					Standard	
					Advanced	
					Tour	
					Basic2	
				Start Address	**0–512**	Sets the sACN starting address
				Universe	**0–255**	Sets the sACN universe
	Dual Control	**Movement**	**DMX**	**Personality**	**Basic**	Sets the DMX personality (see Control Personalities)
					Standard	
					Advanced	
					Basic2	
				Start Address	**0–512**	Sets the DMX starting address
			ArtNet	**Personality**	**Basic**	Sets the Art-Net™ personality (see Control Personalities)
					Standard	
					Advanced	
					Basic2	
				Start Address	**0–512**	Sets the Art-Net™ starting address
				Universe	**0–255**	Sets the Art-Net™ universe
			sACN	**Personality**	**Basic**	Sets the sACN personality (see Control Personalities)
					Standard	
					Advanced	
					Basic2	
				Start Address	**0–512**	Sets the sACN starting address
				Universe	**0–255**	Sets the sACN universe
		Pixels	**DMX**	**Personality**	**Basic**	Sets the DMX personality (see Control Personalities)
					Standard	
					Advanced	
				Start Address	**0–512**	Sets the DMX starting address
			ArtNet	**Personality**	**Basic**	Sets the Art-Net™ personality (see Control Personalities)
					Standard	
					Advanced	
				Start Address	**0–512**	Sets the Art-Net™ starting address
				Universe	**0–255**	Sets the Art-Net™ universe
			sACN	**Personality**	**Basic**	Sets the sACN personality (see Control Personalities)
					Standard	
					Advanced	
				Start Address	**0–512**	Sets the sACN starting address
				Universe	**0–255**	Sets the sACN universe
			KlingNet	**Personality**	**Basic**	Sets the Kling-Net personality (see Control Personalities)
					Standard	

Main Level	Programming Levels				Description
Run Mode	Auto Test				Auto test all functions
	Manual Test	Tilt		000–255	Manually control and test all settings through the control panel
		P/T Speed			
		Red			
		Green			
		Blue			
		White			
		CTC			
		Color			
		Pattern			
		LED Macro			
		LED Ma. Speed			
		LED Ma. Fade			
		Background			
		Background Dim.			
		Dimmer			
		Shutter			
		Function			
		Zoom1			
		Zoom2			
Setup	Network Settings	IP Mode		Manual	Manually sets IP address
				DHCP	Network sets IP address
				Static	Product sets IP address
		IP	IP Byte 1–4	000–255	Sets IP address in manual mode
		SMK	SubMask 1–4	000–255	Sets Subnet Mask in manual mode
	Tilt Reverse	NO			Normal tilt
		YES			Reversed tilt
	Tilt Function	NO			Enables/disables tilt
		YES			
	Zoom Reverse	NO			Normal zoom
		YES			Reversed zoom
	Screen Reverse	NO			Normal display
		YES			Inverted display
		AUTO			Automatic display orientation
	Tilt Angle	200			200° tilt range
		180			180° tilt range
		60			60° tilt range
	BL. O. T Move	NO			Do not blackout while tilt
		YES			Blackout while tilt
	Backlight Timer	30S			Display turns off after 30 seconds
		1M			Display turns off after 1 minute
		5M			Display turns off after 5 minutes
		ON			Display stays on
	Loss of Data	Hold			Holds last signal received
		Close			Blacks out fixture
	Fans	Auto			Fan speed according to product temperature
		Full			Fan speed set on high
		ECO			Quiet mode
	Defrost Fan	OFF			Activate defrost fan
		ON			Deactivate defrost fan
	C Mixing Mode	RGBW			RGBW mode (additive)
		CMY			CMY mode (subtractive)
	Dimmer Curve	Linear Square I Squa SCurve			Set the dimmer curve

Main Level	Programming Levels			Description
Setup	Dimmer Speed	Smooth Fast		Set the dimmer speed
	PWM Option	600Hz 1200Hz 2000Hz 4000Hz 6000Hz 15000Hz		Sets the Pulse Width Modulation frequency
	Cell Order	1–16		Light activates from left to right
		16–1		Light activates from right to left
	Calibrated White	ON		Default light output temperature set to 7500K
		OFF		Deactivates calibrated white setting
		Custom		Adjust light output temperature using White Balance setting
	White Balance	Red	000–255	Sets red LED maximum value
		Green		Sets green LED maximum value
		Blue		Sets blue LED maximum value
		White		Sets white LED maximum value
	Preset Select	PRESET A PRESET B PRESET C		Recorded preset menu options
	Preset Sync	NO		Allows recorded preset menu options to be transferred to other COLORado PXL Bar 16 in the DMX daisy chain
		YES		
	USB Update	NO		Enables/disables updating by USB
		YES		
	Reset Function	Tilt	NO	Reset individual functions or all functions from startup
			YES	
		Zoom	NO	
			YES	
		All	NO	
			YES	
	Factory Settings	NO		Reset to factory default settings
		YES		
Information	Firmware Version		V_	Shows firmware version
	Running Mode		_ _ _	Shows current running mode
	Address		_ _ _	Shows current starting address
	Temperature		_ _ _	Shows current product temperature in °C
	Fixture Time		_ _ _ _ _	Shows number of hours product has been powered on
	LED Hours		_ _ _ _ _	Shows total hours the LED has been powered on
	ArtNet Info	Ip	_ _ _._ _ _._ _ _._ _ _	Shows current IP address
		SubMask	_ _ _._ _ _._ _ _._ _ _	Shows current Subnet Mask
		MAC	_ _._ _ _._ _ _._ _ _._ _ _	Shows current MAC address
	Device UID		_ _ _ _ _	Shows product UID
	Fan Information	Head Fan 1–10	_ _ _ _	Shows speed of head fans 1–10 in rpm
		Defrost Fan 1–2	_ _ _ _	Shows speed of defrost fans 1–2 in rpm
		Base Fan 1–2	_ _ _ _	Shows speed of base fans 1–2 in rpm

DMX Values

Single Control

Basic2 (19CH)

Channel	Function	Value	Percent/Setting
1	**Tilt**	000 ⇔ 255	0–100%
2	**Fine tilt**	000 ⇔ 255	0–100%
3	**Tilt speed**	000 ⇔ 255	0–100%
4	**CTC**	000 001 ⇔ 255	No function Color temperature, 1900–2700 K
5	**Color**	000 ⇔ 255	see Color Chart
6	**Patterns** (see Patterns)	000 001 ⇔ 255	No function Pattern 1–255
7	**LED macro**	000 ⇔ 255	see LED Macro
8	**LED macro speed**	000 ⇔ 127 128 129 ⇔ 255	Auto speed, fast to slow clockwise Stop Auto speed, slow to fast counterclockwise
9	**LED macro delay**	000 ⇔ 255	Fast to slow
10	**Background color**	000 ⇔ 255	see Color Chart
11	**Background color dimmer**	000 ⇔ 255	0–100%
12	**Dimmer**	000 ⇔ 255	0–100%
13	**Strobe**	000 ⇔ 255	see Strobe Settings
14	**Zoom**	000 ⇔ 255	Zoom in to zoom out
15	**Control**	000 ⇔ 255	see Control Settings
16	**Red**	000 ⇔ 255	RGBW Mode: 0–100% / CMY Mode: 100–0%
17	**Green**	000 ⇔ 255	RGBW Mode: 0–100% / CMY Mode: 100–0%
18	**Blue**	000 ⇔ 255	RGBW Mode: 0–100% / CMY Mode: 100–0%
19	**White**	000 ⇔ 255	RGBW Mode: 0–100% / CMY Mode: 100–0%

The “Single Control: Basic2” personality of the COLORado PXL Bar 16 exactly matches the “Single Control: Basic” personality of the COLORado PXL Bar 8.

Tour (186CH) / Advanced (154CH) / Standard (84CH) / Basic (20CH)

20 CH	84 CH	154 CH	186 CH	Function		Value	Percent/Setting
1	1	1	1	**Tilt**		000 ⇔ 255	0–100%
2	2	2	2	**Fine tilt**		000 ⇔ 255	0–100%
3	3	3	3	**Tilt speed**		000 ⇔ 255	0–100%
4	4	4	4	**CTC**		000 001 ⇔ 255	No function Color temperature, 1900–2700 K
5	5	5	5	**Color**		000 ⇔ 255	see Color Chart
6	6	6	6	**Patterns** (see Patterns)		000 001 ⇔ 255	No function Pattern 1–255
7	7	7	7	**LED macro**		000 ⇔ 255	see LED Macro
8	8	8	8	**LED macro speed**		000 ⇔ 127 128 129 ⇔ 255	Auto speed, fast to slow clockwise Stop Auto speed, slow to fast counterclockwise
9	9	9	9	**LED macro delay**		000 ⇔ 255	Fast to slow
10	10	10	10	**Background color**		000 ⇔ 255	see Color Chart
11	11	11	11	**Background color dimmer**		000 ⇔ 255	0–100%
–	–	12	12	**Background color fine dimmer**		000 ⇔ 255	0–100%
12	12	13	13	**Dimmer**		000 ⇔ 255	0–100%
–	–	14	14	**Fine dimmer**		000 ⇔ 255	0–100%
13	13	15	15	**Strobe**		000 ⇔ 255	see Strobe Settings
14	14	16	16	**Zoom 1** (see Zoom Zones)		000 ⇔ 255	Zoom in to zoom out (Zone 1)
15	15	17	17	**Zoom 2** (see Zoom Zones)		000 ⇔ 255	Zoom in to zoom out (Zone 2)
16	16	18	18	**Control**		000 ⇔ 255	see Control Settings
17	17	19	19	**Main red**		000 ⇔ 255	RGBW Mode: 0–100% / CMY Mode: 100–0%
–	–	20	20	**Main fine red**		000 ⇔ 255	RGBW Mode: 0–100% / CMY Mode: 100–0%
18	18	21	21	**Main green**		000 ⇔ 255	RGBW Mode: 0–100% / CMY Mode: 100–0%
–	–	22	22	**Main fine green**		000 ⇔ 255	RGBW Mode: 0–100% / CMY Mode: 100–0%
19	19	23	23	**Main blue**		000 ⇔ 255	RGBW Mode: 0–100% / CMY Mode: 100–0%
–	–	24	24	**Main fine blue**		000 ⇔ 255	RGBW Mode: 0–100% / CMY Mode: 100–0%
20	20	25	25	**Main white**		000 ⇔ 255	RGBW Mode: 0–100% / CMY Mode: 100–0%
–	–	26	26	**Main fine white**		000 ⇔ 255	RGBW Mode: 0–100% / CMY Mode: 100–0%
–	–	–	27	**Dimmer 1**		000 ⇔ 255	0–100%
–	–	–	28	**Fine dimmer 1**		000 ⇔ 255	0–100%
–	21	27	29	**Red 1**	**Cyan 1**	000 ⇔ 255	RGBW Mode: 0–100% / CMY Mode: 100–0%
–	–	28	30	**Fine red 1**	**Fine cyan 1**	000 ⇔ 255	RGBW Mode: 0–100% / CMY Mode: 100–0%
–	22	29	31	**Green 1**	**Magenta 1**	000 ⇔ 255	RGBW Mode: 0–100% / CMY Mode: 100–0%
–	–	30	32	**Fine green 1**	**Fine magenta 1**	000 ⇔ 255	RGBW Mode: 0–100% / CMY Mode: 100–0%
–	23	31	33	**Blue 1**	**Yellow 1**	000 ⇔ 255	RGBW Mode: 0–100% / CMY Mode: 100–0%
–	–	32	34	**Fine blue 1**	**Fine yellow 1**	000 ⇔ 255	RGBW Mode: 0–100% / CMY Mode: 100–0%
–	24	33	35	**White 1**		000 ⇔ 255	RGBW Mode: 0–100% / CMY Mode: 100–0%
–	–	34	36	**Fine white 1**		000 ⇔ 255	RGBW Mode: 0–100% / CMY Mode: 100–0%
–	–	–	37	**Dimmer 2**		000 ⇔ 255	0–100%
–	–	–	38	**Fine dimmer 2**		000 ⇔ 255	0–100%
–	25	35	39	**Red 2**	**Cyan 2**	000 ⇔ 255	RGBW Mode: 0–100% / CMY Mode: 100–0%
–	–	36	40	**Fine red 2**	**Fine cyan 2**	000 ⇔ 255	RGBW Mode: 0–100% / CMY Mode: 100–0%
–	26	37	41	**Green 2**	**Magenta 2**	000 ⇔ 255	RGBW Mode: 0–100% / CMY Mode: 100–0%
–	–	38	42	**Fine green 2**	**Fine magenta 2**	000 ⇔ 255	RGBW Mode: 0–100% / CMY Mode: 100–0%
–	27	39	43	**Blue 2**	**Yellow 2**	000 ⇔ 255	RGBW Mode: 0–100% / CMY Mode: 100–0%
–	–	40	44	**Fine blue 2**	**Fine yellow 2**	000 ⇔ 255	RGBW Mode: 0–100% / CMY Mode: 100–0%

20 CH	84 CH	154 CH	186 CH	Function		Value	Percent/Setting
–	28	41	45	White 2		000 ⇔ 255	RGBW Mode: 0–100% / CMY Mode: 100–0%
–	–	42	46	Fine white 2		000 ⇔ 255	RGBW Mode: 0–100% / CMY Mode: 100–0%
–	–	–	47	Dimmer 3		000 ⇔ 255	0–100%
–	–	–	48	Fine dimmer 3		000 ⇔ 255	0–100%
–	29	43	49	Red 3	Cyan 3	000 ⇔ 255	RGBW Mode: 0–100% / CMY Mode: 100–0%
–	–	44	50	Fine red 3	Fine cyan 3	000 ⇔ 255	RGBW Mode: 0–100% / CMY Mode: 100–0%
–	30	45	51	Green 3	Magenta 3	000 ⇔ 255	RGBW Mode: 0–100% / CMY Mode: 100–0%
–	–	46	52	Fine green 3	Fine magenta 3	000 ⇔ 255	RGBW Mode: 0–100% / CMY Mode: 100–0%
–	31	47	53	Blue 3	Yellow 3	000 ⇔ 255	RGBW Mode: 0–100% / CMY Mode: 100–0%
–	–	48	54	Fine blue 3	Fine yellow 3	000 ⇔ 255	RGBW Mode: 0–100% / CMY Mode: 100–0%
–	32	49	55	White 3		000 ⇔ 255	RGBW Mode: 0–100% / CMY Mode: 100–0%
–	–	50	56	Fine white 3		000 ⇔ 255	RGBW Mode: 0–100% / CMY Mode: 100–0%
–	–	–	57	Dimmer 4		000 ⇔ 255	0–100%
–	–	–	58	Fine dimmer 4		000 ⇔ 255	0–100%
–	33	51	59	Red 4	Cyan 4	000 ⇔ 255	RGBW Mode: 0–100% / CMY Mode: 100–0%
–	–	52	60	Fine red 4	Fine cyan 4	000 ⇔ 255	RGBW Mode: 0–100% / CMY Mode: 100–0%
–	34	53	61	Green 4	Magenta 4	000 ⇔ 255	RGBW Mode: 0–100% / CMY Mode: 100–0%
–	–	54	62	Fine green 4	Fine magenta 4	000 ⇔ 255	RGBW Mode: 0–100% / CMY Mode: 100–0%
–	35	55	63	Blue 4	Yellow 4	000 ⇔ 255	RGBW Mode: 0–100% / CMY Mode: 100–0%
–	–	56	64	Fine blue 4	Fine yellow 4	000 ⇔ 255	RGBW Mode: 0–100% / CMY Mode: 100–0%
–	36	57	65	White 4		000 ⇔ 255	RGBW Mode: 0–100% / CMY Mode: 100–0%
–	–	58	66	Fine white 4		000 ⇔ 255	RGBW Mode: 0–100% / CMY Mode: 100–0%
–	–	–	67	Dimmer 5		000 ⇔ 255	0–100%
–	–	–	68	Fine dimmer 5		000 ⇔ 255	0–100%
–	37	59	69	Red 5	Cyan 5	000 ⇔ 255	RGBW Mode: 0–100% / CMY Mode: 100–0%
–	–	60	70	Fine red 5	Fine cyan 5	000 ⇔ 255	RGBW Mode: 0–100% / CMY Mode: 100–0%
–	38	61	71	Green 5	Magenta 5	000 ⇔ 255	RGBW Mode: 0–100% / CMY Mode: 100–0%
–	–	62	72	Fine green 5	Fine magenta 5	000 ⇔ 255	RGBW Mode: 0–100% / CMY Mode: 100–0%
–	39	63	73	Blue 5	Yellow 5	000 ⇔ 255	RGBW Mode: 0–100% / CMY Mode: 100–0%
–	–	64	74	Fine blue 5	Fine yellow 5	000 ⇔ 255	RGBW Mode: 0–100% / CMY Mode: 100–0%
–	40	65	75	White 5		000 ⇔ 255	RGBW Mode: 0–100% / CMY Mode: 100–0%
–	–	66	76	Fine white 5		000 ⇔ 255	RGBW Mode: 0–100% / CMY Mode: 100–0%
–	–	–	77	Dimmer 6		000 ⇔ 255	0–100%
–	–	–	78	Fine dimmer 6		000 ⇔ 255	0–100%
–	41	67	79	Red 6	Cyan 6	000 ⇔ 255	RGBW Mode: 0–100% / CMY Mode: 100–0%
–	–	68	80	Fine red 6	Fine cyan 6	000 ⇔ 255	RGBW Mode: 0–100% / CMY Mode: 100–0%
–	42	69	81	Green 6	Magenta 6	000 ⇔ 255	RGBW Mode: 0–100% / CMY Mode: 100–0%
–	–	70	82	Fine green 6	Fine magenta 6	000 ⇔ 255	RGBW Mode: 0–100% / CMY Mode: 100–0%
–	43	71	83	Blue 6	Yellow 6	000 ⇔ 255	RGBW Mode: 0–100% / CMY Mode: 100–0%
–	–	72	84	Fine blue 6	Fine yellow 6	000 ⇔ 255	RGBW Mode: 0–100% / CMY Mode: 100–0%
–	44	73	85	White 6		000 ⇔ 255	RGBW Mode: 0–100% / CMY Mode: 100–0%
–	–	74	86	Fine white 6		000 ⇔ 255	RGBW Mode: 0–100% / CMY Mode: 100–0%
–	–	–	87	Dimmer 7		000 ⇔ 255	0–100%
–	–	–	88	Fine dimmer 7		000 ⇔ 255	0–100%
–	45	75	89	Red 7	Cyan 7	000 ⇔ 255	RGBW Mode: 0–100% / CMY Mode: 100–0%
–	–	76	90	Fine red 7	Fine cyan 7	000 ⇔ 255	RGBW Mode: 0–100% / CMY Mode: 100–0%
–	46	77	91	Green 7	Magenta 7	000 ⇔ 255	RGBW Mode: 0–100% / CMY Mode: 100–0%
–	–	78	92	Fine green 7	Fine magenta 7	000 ⇔ 255	RGBW Mode: 0–100% / CMY Mode: 100–0%

20 CH	84 CH	154 CH	186 CH	Function		Value	Percent/Setting
–	47	79	93	Blue 7	Yellow 7	000 ⇔ 255	RGBW Mode: 0–100% / CMY Mode: 100–0%
–	–	80	94	Fine blue 7	Fine yellow 7	000 ⇔ 255	RGBW Mode: 0–100% / CMY Mode: 100–0%
–	48	81	95	White 7		000 ⇔ 255	RGBW Mode: 0–100% / CMY Mode: 100–0%
–	–	82	96	Fine white 7		000 ⇔ 255	RGBW Mode: 0–100% / CMY Mode: 100–0%
–	–	–	97	Dimmer 8		000 ⇔ 255	0–100%
–	–	–	98	Fine dimmer 8		000 ⇔ 255	0–100%
–	49	83	99	Red 8	Cyan 8	000 ⇔ 255	RGBW Mode: 0–100% / CMY Mode: 100–0%
–	–	84	100	Fine red 8	Fine cyan 8	000 ⇔ 255	RGBW Mode: 0–100% / CMY Mode: 100–0%
–	50	85	101	Green 8	Magenta 8	000 ⇔ 255	RGBW Mode: 0–100% / CMY Mode: 100–0%
–	–	86	102	Fine green 8	Fine magenta 8	000 ⇔ 255	RGBW Mode: 0–100% / CMY Mode: 100–0%
–	51	87	103	Blue 8	Yellow 8	000 ⇔ 255	RGBW Mode: 0–100% / CMY Mode: 100–0%
–	–	88	104	Fine blue 8	Fine yellow 8	000 ⇔ 255	RGBW Mode: 0–100% / CMY Mode: 100–0%
–	52	89	105	White 8		000 ⇔ 255	RGBW Mode: 0–100% / CMY Mode: 100–0%
–	–	90	106	Fine white 8		000 ⇔ 255	RGBW Mode: 0–100% / CMY Mode: 100–0%
–	–	–	107	Dimmer 9		000 ⇔ 255	0–100%
–	–	–	108	Fine dimmer 9		000 ⇔ 255	0–100%
–	53	91	109	Red 9	Cyan 9	000 ⇔ 255	RGBW Mode: 0–100% / CMY Mode: 100–0%
–	–	92	110	Fine red 9	Fine cyan 9	000 ⇔ 255	RGBW Mode: 0–100% / CMY Mode: 100–0%
–	54	93	111	Green 9	Magenta 9	000 ⇔ 255	RGBW Mode: 0–100% / CMY Mode: 100–0%
–	–	94	112	Fine green 9	Fine magenta 9	000 ⇔ 255	RGBW Mode: 0–100% / CMY Mode: 100–0%
–	55	95	113	Blue 9	Yellow 9	000 ⇔ 255	RGBW Mode: 0–100% / CMY Mode: 100–0%
–	–	96	114	Fine blue 9	Fine yellow 9	000 ⇔ 255	RGBW Mode: 0–100% / CMY Mode: 100–0%
–	56	97	115	White 9		000 ⇔ 255	RGBW Mode: 0–100% / CMY Mode: 100–0%
–	–	98	116	Fine white 9		000 ⇔ 255	RGBW Mode: 0–100% / CMY Mode: 100–0%
–	–	–	117	Dimmer 10		000 ⇔ 255	0–100%
–	–	–	118	Fine dimmer 10		000 ⇔ 255	0–100%
–	57	99	119	Red 10	Cyan 10	000 ⇔ 255	RGBW Mode: 0–100% / CMY Mode: 100–0%
–	–	100	120	Fine red 10	Fine cyan 10	000 ⇔ 255	RGBW Mode: 0–100% / CMY Mode: 100–0%
–	58	101	121	Green 10	Magenta 10	000 ⇔ 255	RGBW Mode: 0–100% / CMY Mode: 100–0%
–	–	102	122	Fine green 10	Fine magenta 10	000 ⇔ 255	RGBW Mode: 0–100% / CMY Mode: 100–0%
–	59	103	123	Blue 10	Yellow 10	000 ⇔ 255	RGBW Mode: 0–100% / CMY Mode: 100–0%
–	–	104	124	Fine blue 10	Fine yellow 10	000 ⇔ 255	RGBW Mode: 0–100% / CMY Mode: 100–0%
–	60	105	125	White 10		000 ⇔ 255	RGBW Mode: 0–100% / CMY Mode: 100–0%
–	–	106	126	Fine white 10		000 ⇔ 255	RGBW Mode: 0–100% / CMY Mode: 100–0%
–	–	–	127	Dimmer 11		000 ⇔ 255	0–100%
–	–	–	128	Fine dimmer 11		000 ⇔ 255	0–100%
–	61	107	129	Red 11	Cyan 11	000 ⇔ 255	RGBW Mode: 0–100% / CMY Mode: 100–0%
–	–	108	130	Fine red 11	Fine cyan 11	000 ⇔ 255	RGBW Mode: 0–100% / CMY Mode: 100–0%
–	62	109	131	Green 11	Magenta 11	000 ⇔ 255	RGBW Mode: 0–100% / CMY Mode: 100–0%
–	–	110	132	Fine green 11	Fine magenta 11	000 ⇔ 255	RGBW Mode: 0–100% / CMY Mode: 100–0%
–	63	111	133	Blue 11	Yellow 11	000 ⇔ 255	RGBW Mode: 0–100% / CMY Mode: 100–0%
–	–	112	134	Fine blue 11	Fine yellow 11	000 ⇔ 255	RGBW Mode: 0–100% / CMY Mode: 100–0%
–	64	113	135	White 11		000 ⇔ 255	RGBW Mode: 0–100% / CMY Mode: 100–0%
–	–	114	136	Fine white 11		000 ⇔ 255	RGBW Mode: 0–100% / CMY Mode: 100–0%
–	–	–	137	Dimmer 12		000 ⇔ 255	0–100%
–	–	–	138	Fine dimmer 12		000 ⇔ 255	0–100%
–	65	115	139	Red 12	Cyan 12	000 ⇔ 255	RGBW Mode: 0–100% / CMY Mode: 100–0%
–	–	116	140	Fine red 12	Fine cyan 12	000 ⇔ 255	RGBW Mode: 0–100% / CMY Mode: 100–0%

20 CH	84 CH	154 CH	186 CH	Function		Value	Percent/Setting
–	66	117	141	Green 12	Magenta 12	000 ⇔ 255	RGBW Mode: 0–100% / CMY Mode: 100–0%
–	–	118	142	Fine green 12	Fine magenta 12	000 ⇔ 255	RGBW Mode: 0–100% / CMY Mode: 100–0%
–	67	119	143	Blue 12	Yellow 12	000 ⇔ 255	RGBW Mode: 0–100% / CMY Mode: 100–0%
–	–	120	144	Fine blue 12	Fine yellow 12	000 ⇔ 255	RGBW Mode: 0–100% / CMY Mode: 100–0%
–	68	121	145	White 12		000 ⇔ 255	RGBW Mode: 0–100% / CMY Mode: 100–0%
–	–	122	146	Fine white 12		000 ⇔ 255	RGBW Mode: 0–100% / CMY Mode: 100–0%
–	–	–	147	Dimmer 13		000 ⇔ 255	0–100%
–	–	–	148	Fine dimmer 13		000 ⇔ 255	0–100%
–	69	123	149	Red 13	Cyan 13	000 ⇔ 255	RGBW Mode: 0–100% / CMY Mode: 100–0%
–	–	124	150	Fine red 13	Fine cyan 13	000 ⇔ 255	RGBW Mode: 0–100% / CMY Mode: 100–0%
–	70	125	151	Green 13	Magenta 13	000 ⇔ 255	RGBW Mode: 0–100% / CMY Mode: 100–0%
–	–	126	152	Fine green 13	Fine magenta 13	000 ⇔ 255	RGBW Mode: 0–100% / CMY Mode: 100–0%
–	71	127	153	Blue 13	Yellow 13	000 ⇔ 255	RGBW Mode: 0–100% / CMY Mode: 100–0%
–	–	128	154	Fine blue 13	Fine yellow 13	000 ⇔ 255	RGBW Mode: 0–100% / CMY Mode: 100–0%
–	72	129	155	White 13		000 ⇔ 255	RGBW Mode: 0–100% / CMY Mode: 100–0%
–	–	130	156	Fine white 13		000 ⇔ 255	RGBW Mode: 0–100% / CMY Mode: 100–0%
–	–	–	157	Dimmer 14		000 ⇔ 255	0–100%
–	–	–	158	Fine dimmer 14		000 ⇔ 255	0–100%
–	73	131	159	Red 14	Cyan 14	000 ⇔ 255	RGBW Mode: 0–100% / CMY Mode: 100–0%
–	–	132	160	Fine red 14	Fine cyan 14	000 ⇔ 255	RGBW Mode: 0–100% / CMY Mode: 100–0%
–	74	133	161	Green 14	Magenta 14	000 ⇔ 255	RGBW Mode: 0–100% / CMY Mode: 100–0%
–	–	134	162	Fine green 14	Fine magenta 14	000 ⇔ 255	RGBW Mode: 0–100% / CMY Mode: 100–0%
–	75	135	163	Blue 14	Yellow 14	000 ⇔ 255	RGBW Mode: 0–100% / CMY Mode: 100–0%
–	–	136	164	Fine blue 14	Fine yellow 14	000 ⇔ 255	RGBW Mode: 0–100% / CMY Mode: 100–0%
–	76	137	165	White 14		000 ⇔ 255	RGBW Mode: 0–100% / CMY Mode: 100–0%
–	–	138	166	Fine white 14		000 ⇔ 255	RGBW Mode: 0–100% / CMY Mode: 100–0%
–	–	–	167	Dimmer 15		000 ⇔ 255	0–100%
–	–	–	168	Fine dimmer 15		000 ⇔ 255	0–100%
–	77	139	169	Red 15	Cyan 15	000 ⇔ 255	RGBW Mode: 0–100% / CMY Mode: 100–0%
–	–	140	170	Fine red 15	Fine cyan 15	000 ⇔ 255	RGBW Mode: 0–100% / CMY Mode: 100–0%
–	78	141	171	Green 15	Magenta 15	000 ⇔ 255	RGBW Mode: 0–100% / CMY Mode: 100–0%
–	–	142	172	Fine green 15	Fine magenta 15	000 ⇔ 255	RGBW Mode: 0–100% / CMY Mode: 100–0%
–	79	143	173	Blue 15	Yellow 15	000 ⇔ 255	RGBW Mode: 0–100% / CMY Mode: 100–0%
–	–	144	174	Fine blue 15	Fine yellow 15	000 ⇔ 255	RGBW Mode: 0–100% / CMY Mode: 100–0%
–	80	145	175	White 15		000 ⇔ 255	RGBW Mode: 0–100% / CMY Mode: 100–0%
–	–	146	176	Fine white 15		000 ⇔ 255	RGBW Mode: 0–100% / CMY Mode: 100–0%
–	–	–	177	Dimmer 16		000 ⇔ 255	0–100%
–	–	–	178	Fine dimmer 16		000 ⇔ 255	0–100%
–	81	147	179	Red 16	Cyan 16	000 ⇔ 255	RGBW Mode: 0–100% / CMY Mode: 100–0%
–	–	148	180	Fine red 16	Fine cyan 16	000 ⇔ 255	RGBW Mode: 0–100% / CMY Mode: 100–0%
–	82	149	181	Green 16	Magenta 16	000 ⇔ 255	RGBW Mode: 0–100% / CMY Mode: 100–0%
–	–	150	182	Fine green 16	Fine magenta 16	000 ⇔ 255	RGBW Mode: 0–100% / CMY Mode: 100–0%
–	83	151	183	Blue 16	Yellow 16	000 ⇔ 255	RGBW Mode: 0–100% / CMY Mode: 100–0%
–	–	152	184	Fine blue 16	Fine yellow 16	000 ⇔ 255	RGBW Mode: 0–100% / CMY Mode: 100–0%
–	84	153	185	White 16		000 ⇔ 255	RGBW Mode: 0–100% / CMY Mode: 100–0%
–	–	154	186	Fine white 16		000 ⇔ 255	RGBW Mode: 0–100% / CMY Mode: 100–0%

Dual Control Movement

Basic2 (7CH)

Channel	Function	Value	Percent/Setting
1	**Tilt**	000 ⇔ 255	0–100%
2	**Fine tilt**	000 ⇔ 255	0–100%
3	**Tilt speed**	000 ⇔ 255	0–100%
4	**Dimmer**	000 ⇔ 255	0–100%
5	**Strobe**	000 ⇔ 255	see Strobe Settings
6	**Zoom**	000 ⇔ 255	Zoom in to zoom out
7	**Control**	000 ⇔ 255	see Control Settings

The "Dual Control Movement: Basic2" personality of the COLORado PXL Bar 16 exactly matches the "Dual Control Movement: Basic" personality of the COLORado PXL Bar 8.

Advanced (26CH) / Standard (20CH) / Basic (8CH)

8 CH	20 CH	26 CH	Function	Value	Percent/Setting
1	1	1	**Tilt**	000 ⇔ 255	0–100%
2	2	2	**Fine tilt**	000 ⇔ 255	0–100%
3	3	3	**Tilt speed**	000 ⇔ 255	0–100%
–	4	4	**CTC**	000 001 ⇔ 255	No function Color temperature, 1900–2700 K
–	5	5	**Color**	000 ⇔ 255	see Color Chart
–	6	6	**Patterns** (see Patterns)	000 001 ⇔ 255	No function Pattern 1–255
–	7	7	**LED macro**	000 ⇔ 255	see LED Macro
–	8	8	**LED macro speed**	000 ⇔ 127 128 129 ⇔ 255	Auto speed, fast to slow clockwise Stop Auto speed, slow to fast counterclockwise
–	9	9	**LED macro delay**	000 ⇔ 255	Fast to slow
–	10	10	**Background color**	000 ⇔ 255	see Color Chart
–	11	11	**Background color dimmer**	000 ⇔ 255	0–100%
–	–	12	**Background color fine dimmer**	000 ⇔ 255	0–100%
4	12	13	**Dimmer**	000 ⇔ 255	0–100%
–	–	14	**Fine dimmer**	000 ⇔ 255	0–100%
5	13	15	**Strobe**	000 ⇔ 255	see Strobe Settings
6	14	16	**Zoom 1** (see Zoom Zones)	000 ⇔ 255	Zoom in to zoom out (Zone 1)
7	15	17	**Zoom 2** (see Zoom Zones)	000 ⇔ 255	Zoom in to zoom out (Zone 2)
8	16	18	**Control**	000 ⇔ 255	see Control Settings
–	17	19	**Red**	000 ⇔ 255	RGBW Mode: 0–100% / CMY Mode: 100–0%
–	–	20	**Fine red**	000 ⇔ 255	RGBW Mode: 0–100% / CMY Mode: 100–0%
–	18	21	**Green**	000 ⇔ 255	RGBW Mode: 0–100% / CMY Mode: 100–0%
–	–	22	**Fine green**	000 ⇔ 255	RGBW Mode: 0–100% / CMY Mode: 100–0%
–	19	23	**Blue**	000 ⇔ 255	RGBW Mode: 0–100% / CMY Mode: 100–0%
–	–	24	**Fine blue**	000 ⇔ 255	RGBW Mode: 0–100% / CMY Mode: 100–0%
–	20	25	**White**	000 ⇔ 255	RGBW Mode: 0–100% / CMY Mode: 100–0%
–	–	26	**Fine white**	000 ⇔ 255	RGBW Mode: 0–100% / CMY Mode: 100–0%

Dual Control Pixels

Advanced (128CH) / Standard (64CH) / Basic (48CH)

48 CH	64 CH	128 CH	Function		Value	Percent/Setting
1	1	1	Red 1	Cyan 1	000 ⇔ 255	RGBW Mode: 0–100% / CMY Mode: 100–0%
–	–	2	Fine red 1	Fine cyan 1	000 ⇔ 255	RGBW Mode: 0–100% / CMY Mode: 100–0%
2	2	3	Green 1	Magenta 1	000 ⇔ 255	RGBW Mode: 0–100% / CMY Mode: 100–0%
–	–	4	Fine green 1	Fine magenta 1	000 ⇔ 255	RGBW Mode: 0–100% / CMY Mode: 100–0%
3	3	5	Blue 1	Yellow 1	000 ⇔ 255	RGBW Mode: 0–100% / CMY Mode: 100–0%
–	–	6	Fine blue 1	Fine yellow 1	000 ⇔ 255	RGBW Mode: 0–100% / CMY Mode: 100–0%
–	4	7	White 1		000 ⇔ 255	RGBW Mode: 0–100% / CMY Mode: 100–0%
–	–	8	Fine white 1		000 ⇔ 255	RGBW Mode: 0–100% / CMY Mode: 100–0%
4	5	9	Red 2	Cyan 2	000 ⇔ 255	RGBW Mode: 0–100% / CMY Mode: 100–0%
–	–	10	Fine red 2	Fine cyan 2	000 ⇔ 255	RGBW Mode: 0–100% / CMY Mode: 100–0%
5	6	11	Green 2	Magenta 2	000 ⇔ 255	RGBW Mode: 0–100% / CMY Mode: 100–0%
–	–	12	Fine green 2	Fine magenta 2	000 ⇔ 255	RGBW Mode: 0–100% / CMY Mode: 100–0%
6	7	13	Blue 2	Yellow 2	000 ⇔ 255	RGBW Mode: 0–100% / CMY Mode: 100–0%
–	–	14	Fine blue 2	Fine yellow 2	000 ⇔ 255	RGBW Mode: 0–100% / CMY Mode: 100–0%
–	8	15	White 2		000 ⇔ 255	RGBW Mode: 0–100% / CMY Mode: 100–0%
–	–	16	Fine white 2		000 ⇔ 255	RGBW Mode: 0–100% / CMY Mode: 100–0%
7	9	17	Red 3	Cyan 3	000 ⇔ 255	RGBW Mode: 0–100% / CMY Mode: 100–0%
–	–	18	Fine red 3	Fine cyan 3	000 ⇔ 255	RGBW Mode: 0–100% / CMY Mode: 100–0%
8	10	19	Green 3	Magenta 3	000 ⇔ 255	RGBW Mode: 0–100% / CMY Mode: 100–0%
–	–	20	Fine green 3	Fine magenta 3	000 ⇔ 255	RGBW Mode: 0–100% / CMY Mode: 100–0%
9	11	21	Blue 3	Yellow 3	000 ⇔ 255	RGBW Mode: 0–100% / CMY Mode: 100–0%
–	–	22	Fine blue 3	Fine yellow 3	000 ⇔ 255	RGBW Mode: 0–100% / CMY Mode: 100–0%
–	12	23	White 3		000 ⇔ 255	RGBW Mode: 0–100% / CMY Mode: 100–0%
–	–	24	Fine white 3		000 ⇔ 255	RGBW Mode: 0–100% / CMY Mode: 100–0%
10	13	25	Red 4	Cyan 4	000 ⇔ 255	RGBW Mode: 0–100% / CMY Mode: 100–0%
–	–	26	Fine red 4	Fine cyan 4	000 ⇔ 255	RGBW Mode: 0–100% / CMY Mode: 100–0%
11	14	27	Green 4	Magenta 4	000 ⇔ 255	RGBW Mode: 0–100% / CMY Mode: 100–0%
–	–	28	Fine green 4	Fine magenta 4	000 ⇔ 255	RGBW Mode: 0–100% / CMY Mode: 100–0%
12	15	29	Blue 4	Yellow 4	000 ⇔ 255	RGBW Mode: 0–100% / CMY Mode: 100–0%
–	–	30	Fine blue 4	Fine yellow 4	000 ⇔ 255	RGBW Mode: 0–100% / CMY Mode: 100–0%
–	16	31	White 4		000 ⇔ 255	RGBW Mode: 0–100% / CMY Mode: 100–0%
–	–	32	Fine white 4		000 ⇔ 255	RGBW Mode: 0–100% / CMY Mode: 100–0%
13	17	33	Red 5	Cyan 5	000 ⇔ 255	RGBW Mode: 0–100% / CMY Mode: 100–0%
–	–	34	Fine red 5	Fine cyan 5	000 ⇔ 255	RGBW Mode: 0–100% / CMY Mode: 100–0%
14	18	35	Green 5	Magenta 5	000 ⇔ 255	RGBW Mode: 0–100% / CMY Mode: 100–0%
–	–	36	Fine green 5	Fine magenta 5	000 ⇔ 255	RGBW Mode: 0–100% / CMY Mode: 100–0%
15	19	37	Blue 5	Yellow 5	000 ⇔ 255	RGBW Mode: 0–100% / CMY Mode: 100–0%
–	–	38	Fine blue 5	Fine yellow 5	000 ⇔ 255	RGBW Mode: 0–100% / CMY Mode: 100–0%
–	20	39	White 5		000 ⇔ 255	RGBW Mode: 0–100% / CMY Mode: 100–0%
–	–	40	Fine white 5		000 ⇔ 255	RGBW Mode: 0–100% / CMY Mode: 100–0%
16	21	41	Red 6	Cyan 6	000 ⇔ 255	RGBW Mode: 0–100% / CMY Mode: 100–0%
–	–	42	Fine red 6	Fine cyan 6	000 ⇔ 255	RGBW Mode: 0–100% / CMY Mode: 100–0%
17	22	43	Green 6	Magenta 6	000 ⇔ 255	RGBW Mode: 0–100% / CMY Mode: 100–0%
–	–	44	Fine green 6	Fine magenta 6	000 ⇔ 255	RGBW Mode: 0–100% / CMY Mode: 100–0%
18	23	45	Blue 6	Yellow 6	000 ⇔ 255	RGBW Mode: 0–100% / CMY Mode: 100–0%
–	–	46	Fine blue 6	Fine yellow 6	000 ⇔ 255	RGBW Mode: 0–100% / CMY Mode: 100–0%
–	24	47	White 6		000 ⇔ 255	RGBW Mode: 0–100% / CMY Mode: 100–0%
–	–	48	Fine white 6		000 ⇔ 255	RGBW Mode: 0–100% / CMY Mode: 100–0%
19	25	49	Red 7	Cyan 7	000 ⇔ 255	RGBW Mode: 0–100% / CMY Mode: 100–0%
–	–	50	Fine red 7	Fine cyan 7	000 ⇔ 255	RGBW Mode: 0–100% / CMY Mode: 100–0%

48 CH	64 CH	128 CH	Function		Value	Percent/Setting
20	26	51	Green 7	Magenta 7	000 ⇔ 255	RGBW Mode: 0–100% / CMY Mode: 100–0%
–	–	52	Fine green 7	Fine magenta 7	000 ⇔ 255	RGBW Mode: 0–100% / CMY Mode: 100–0%
21	27	53	Blue 7	Yellow 7	000 ⇔ 255	RGBW Mode: 0–100% / CMY Mode: 100–0%
–	–	54	Fine blue 7	Fine yellow 7	000 ⇔ 255	RGBW Mode: 0–100% / CMY Mode: 100–0%
–	28	55	White 7		000 ⇔ 255	RGBW Mode: 0–100% / CMY Mode: 100–0%
–	–	56	Fine white 7		000 ⇔ 255	RGBW Mode: 0–100% / CMY Mode: 100–0%
22	29	57	Red 8	Cyan 8	000 ⇔ 255	RGBW Mode: 0–100% / CMY Mode: 100–0%
–	–	58	Fine red 8	Fine cyan 8	000 ⇔ 255	RGBW Mode: 0–100% / CMY Mode: 100–0%
23	30	59	Green 8	Magenta 8	000 ⇔ 255	RGBW Mode: 0–100% / CMY Mode: 100–0%
–	–	60	Fine green 8	Fine magenta 8	000 ⇔ 255	RGBW Mode: 0–100% / CMY Mode: 100–0%
24	31	61	Blue 8	Yellow 8	000 ⇔ 255	RGBW Mode: 0–100% / CMY Mode: 100–0%
–	–	62	Fine blue 8	Fine yellow 8	000 ⇔ 255	RGBW Mode: 0–100% / CMY Mode: 100–0%
–	32	63	White 8		000 ⇔ 255	RGBW Mode: 0–100% / CMY Mode: 100–0%
–	–	64	Fine white 8		000 ⇔ 255	RGBW Mode: 0–100% / CMY Mode: 100–0%
25	33	65	Red 9	Cyan 9	000 ⇔ 255	RGBW Mode: 0–100% / CMY Mode: 100–0%
–	–	66	Fine red 9	Fine cyan 9	000 ⇔ 255	RGBW Mode: 0–100% / CMY Mode: 100–0%
26	34	67	Green 9	Magenta 9	000 ⇔ 255	RGBW Mode: 0–100% / CMY Mode: 100–0%
–	–	68	Fine green 9	Fine magenta 9	000 ⇔ 255	RGBW Mode: 0–100% / CMY Mode: 100–0%
27	35	69	Blue 9	Yellow 9	000 ⇔ 255	RGBW Mode: 0–100% / CMY Mode: 100–0%
–	–	70	Fine blue 9	Fine yellow 9	000 ⇔ 255	RGBW Mode: 0–100% / CMY Mode: 100–0%
–	36	71	White 9		000 ⇔ 255	RGBW Mode: 0–100% / CMY Mode: 100–0%
–	–	72	Fine white 9		000 ⇔ 255	RGBW Mode: 0–100% / CMY Mode: 100–0%
28	37	73	Red 10	Cyan 10	000 ⇔ 255	RGBW Mode: 0–100% / CMY Mode: 100–0%
–	–	74	Fine red 10	Fine cyan 10	000 ⇔ 255	RGBW Mode: 0–100% / CMY Mode: 100–0%
29	38	75	Green 10	Magenta 10	000 ⇔ 255	RGBW Mode: 0–100% / CMY Mode: 100–0%
–	–	76	Fine green 10	Fine magenta 10	000 ⇔ 255	RGBW Mode: 0–100% / CMY Mode: 100–0%
30	39	77	Blue 10	Yellow 10	000 ⇔ 255	RGBW Mode: 0–100% / CMY Mode: 100–0%
–	–	78	Fine blue 10	Fine yellow 10	000 ⇔ 255	RGBW Mode: 0–100% / CMY Mode: 100–0%
–	40	79	White 10		000 ⇔ 255	RGBW Mode: 0–100% / CMY Mode: 100–0%
–	–	80	Fine white 10		000 ⇔ 255	RGBW Mode: 0–100% / CMY Mode: 100–0%
31	41	81	Red 11	Cyan 11	000 ⇔ 255	RGBW Mode: 0–100% / CMY Mode: 100–0%
–	–	82	Fine red 11	Fine cyan 11	000 ⇔ 255	RGBW Mode: 0–100% / CMY Mode: 100–0%
32	42	83	Green 11	Magenta 11	000 ⇔ 255	RGBW Mode: 0–100% / CMY Mode: 100–0%
–	–	84	Fine green 11	Fine magenta 11	000 ⇔ 255	RGBW Mode: 0–100% / CMY Mode: 100–0%
33	43	85	Blue 11	Yellow 11	000 ⇔ 255	RGBW Mode: 0–100% / CMY Mode: 100–0%
–	–	86	Fine blue 11	Fine yellow 11	000 ⇔ 255	RGBW Mode: 0–100% / CMY Mode: 100–0%
–	44	87	White 11		000 ⇔ 255	RGBW Mode: 0–100% / CMY Mode: 100–0%
–	–	88	Fine white 11		000 ⇔ 255	RGBW Mode: 0–100% / CMY Mode: 100–0%
34	45	89	Red 12	Cyan 12	000 ⇔ 255	RGBW Mode: 0–100% / CMY Mode: 100–0%
–	–	90	Fine red 12	Fine cyan 12	000 ⇔ 255	RGBW Mode: 0–100% / CMY Mode: 100–0%
35	46	91	Green 12	Magenta 12	000 ⇔ 255	RGBW Mode: 0–100% / CMY Mode: 100–0%
–	–	92	Fine green 12	Fine magenta 12	000 ⇔ 255	RGBW Mode: 0–100% / CMY Mode: 100–0%
36	47	93	Blue 12	Yellow 12	000 ⇔ 255	RGBW Mode: 0–100% / CMY Mode: 100–0%
–	–	94	Fine blue 12	Fine yellow 12	000 ⇔ 255	RGBW Mode: 0–100% / CMY Mode: 100–0%
–	48	95	White 12		000 ⇔ 255	RGBW Mode: 0–100% / CMY Mode: 100–0%
–	–	96	Fine white 12		000 ⇔ 255	RGBW Mode: 0–100% / CMY Mode: 100–0%
37	49	97	Red 13	Cyan 13	000 ⇔ 255	RGBW Mode: 0–100% / CMY Mode: 100–0%
–	–	98	Fine red 13	Fine cyan 13	000 ⇔ 255	RGBW Mode: 0–100% / CMY Mode: 100–0%
38	50	99	Green 13	Magenta 13	000 ⇔ 255	RGBW Mode: 0–100% / CMY Mode: 100–0%

48 CH	64 CH	128 CH	Function		Value	Percent/Setting
–	–	100	Fine green 13	Fine magenta 13	000 ⇔ 255	RGBW Mode: 0–100% / CMY Mode: 100–0%
39	51	101	Blue 13	Yellow 13	000 ⇔ 255	RGBW Mode: 0–100% / CMY Mode: 100–0%
–	–	102	Fine blue 13	Fine yellow 13	000 ⇔ 255	RGBW Mode: 0–100% / CMY Mode: 100–0%
–	52	103	White 13		000 ⇔ 255	RGBW Mode: 0–100% / CMY Mode: 100–0%
–	–	104	Fine white 13		000 ⇔ 255	RGBW Mode: 0–100% / CMY Mode: 100–0%
40	53	105	Red 14	Cyan 14	000 ⇔ 255	RGBW Mode: 0–100% / CMY Mode: 100–0%
–	–	106	Fine red 14	Fine cyan 14	000 ⇔ 255	RGBW Mode: 0–100% / CMY Mode: 100–0%
41	54	107	Green 14	Magenta 14	000 ⇔ 255	RGBW Mode: 0–100% / CMY Mode: 100–0%
–	–	108	Fine green 14	Fine magenta 14	000 ⇔ 255	RGBW Mode: 0–100% / CMY Mode: 100–0%
42	55	109	Blue 14	Yellow 14	000 ⇔ 255	RGBW Mode: 0–100% / CMY Mode: 100–0%
–	–	110	Fine blue 14	Fine yellow 14	000 ⇔ 255	RGBW Mode: 0–100% / CMY Mode: 100–0%
–	56	111	White 14		000 ⇔ 255	RGBW Mode: 0–100% / CMY Mode: 100–0%
–	–	112	Fine white 14		000 ⇔ 255	RGBW Mode: 0–100% / CMY Mode: 100–0%
43	57	113	Red 15	Cyan 15	000 ⇔ 255	RGBW Mode: 0–100% / CMY Mode: 100–0%
–	–	114	Fine red 15	Fine cyan 15	000 ⇔ 255	RGBW Mode: 0–100% / CMY Mode: 100–0%
44	58	115	Green 15	Magenta 15	000 ⇔ 255	RGBW Mode: 0–100% / CMY Mode: 100–0%
–	–	116	Fine green 15	Fine magenta 15	000 ⇔ 255	RGBW Mode: 0–100% / CMY Mode: 100–0%
45	59	117	Blue 15	Yellow 15	000 ⇔ 255	RGBW Mode: 0–100% / CMY Mode: 100–0%
–	–	118	Fine blue 15	Fine yellow 15	000 ⇔ 255	RGBW Mode: 0–100% / CMY Mode: 100–0%
–	60	119	White 15		000 ⇔ 255	RGBW Mode: 0–100% / CMY Mode: 100–0%
–	–	120	Fine white 15		000 ⇔ 255	RGBW Mode: 0–100% / CMY Mode: 100–0%
46	61	121	Red 16	Cyan 16	000 ⇔ 255	RGBW Mode: 0–100% / CMY Mode: 100–0%
–	–	122	Fine red 16	Fine cyan 16	000 ⇔ 255	RGBW Mode: 0–100% / CMY Mode: 100–0%
47	62	123	Green 16	Magenta 16	000 ⇔ 255	RGBW Mode: 0–100% / CMY Mode: 100–0%
–	–	124	Fine green 16	Fine magenta 16	000 ⇔ 255	RGBW Mode: 0–100% / CMY Mode: 100–0%
48	63	125	Blue 16	Yellow 16	000 ⇔ 255	RGBW Mode: 0–100% / CMY Mode: 100–0%
–	–	126	Fine blue 16	Fine yellow 16	000 ⇔ 255	RGBW Mode: 0–100% / CMY Mode: 100–0%
–	64	127	White 16		000 ⇔ 255	RGBW Mode: 0–100% / CMY Mode: 100–0%
–	–	128	Fine white 16		000 ⇔ 255	RGBW Mode: 0–100% / CMY Mode: 100–0%

Color Chart

Value	Percent/Setting				
000	No function				
001 ⇔ 002	White 2700K	R = 156	G = 118	B = 0	W = 63
003 ⇔ 004	White 3200K	R = 156	G = 141	B = 5	W = 89
005 ⇔ 006	White 4200K	R = 156	G = 141	B = 14	W = 255
007 ⇔ 008	White 5600K	R = 156	G = 207	B = 54	W = 255
009 ⇔ 010	White 8000K	R = 130	G = 255	B = 96	W = 255
011	Blue	R = 0	G = 0	B = 255	W = 0
012 ⇔ 048	+ Green	R = 0	G = 0–255	B = 255	W = 0
049	Cyan	R = 0	G = 255	B = 255	W = 0
050 ⇔ 086	- Blue	R = 0	G = 255	B = 255–0	W = 0
087	Green	R = 0	G = 255	B = 0	W = 0
088 ⇔ 124	+ Red	R = 0–255	G = 255	B = 0	W = 0
125	Yellow	R = 255	G = 255	B = 0	W = 0
126 ⇔ 162	- Green	R = 255	G = 255–0	B = 0	W = 0
163	Red	R = 255	G = 0	B = 0	W = 0
164 ⇔ 200	+ Blue	R = 255	G = 0	B = 0–255	W = 0
201	Magenta	R = 255	G = 0	B = 255	W = 0
202 ⇔ 238	- Red	R = 255–0	G = 0	B = 255	W = 0
239	Blue	R = 0	G = 0	B = 255	W = 0
240 ⇔ 247	Color fade, fast to slow				
248 ⇔ 255	Color snap, fast to slow				

Strobe Settings

Value	Percent/Setting	Value	Percent/Setting
000 ⇔ 019	Off	145 ⇔ 149	On
020 ⇔ 024	On	150 ⇔ 164	Random strobe 0–100%, fast to slow
025 ⇔ 064	Strobe, fast to slow	165 ⇔ 169	On
065 ⇔ 069	On	170 ⇔ 184	Pulse strobe, fast to slow
070 ⇔ 084	Strobe 100–0%, fast to slow	185 ⇔ 189	On
085 ⇔ 089	On	190 ⇔ 204	Random pulse strobe, fast to slow
090 ⇔ 104	Strobe 0–100%, fast to slow	205 ⇔ 209	On
105 ⇔ 109	On	210 ⇔ 224	Strobe 0–100–0%, fast to slow
110 ⇔ 124	Random strobe, fast to slow	225 ⇔ 229	On
125 ⇔ 129	On	230 ⇔ 244	Random pulse strobe, fast to slow
130 ⇔ 144	Random strobe 100–0%, fast to slow	245 ⇔ 255	On

Control Settings

Value	Percent/Setting	Value	Percent/Setting
000 ⇔ 009	No function	082 ⇔ 084	Cell order 1-16
010 ⇔ 014	Blackout on tilt	085 ⇔ 089	Cell order 16-1
015 ⇔ 019	Reserved for future use	090 ⇔ 094	Tilt reverse
020 ⇔ 024	RGBW (additive) color-mixing mode	095 ⇔ 099	Reserved for future use
025 ⇔ 029	CMY (subtractive) color-mixing mode	100 ⇔ 104	Tilt reverse disable
030 ⇔ 034	Single zoom off	105 ⇔ 119	Reserved for future use
035 ⇔ 039	Single zoom on	120 ⇔ 124	Fan ECO
040 ⇔ 044	Defrost fan on	125 ⇔ 129	Fan full
045 ⇔ 049	Defrost fan off	130 ⇔ 134	Fan auto
050 ⇔ 054	Reserved for future use	135 ⇔ 139	Dimmer fast
055 ⇔ 059	Tilt reset	140 ⇔ 144	Dimmer smooth
060 ⇔ 064	Zoom reset	145 ⇔ 149	Linear
065 ⇔ 069	Reserved for future use	150 ⇔ 154	Square
070 ⇔ 074	Reset all	155 ⇔ 159	i Squa
075	PWM 600HZ	160 ⇔ 164	SCurve
076	PWM 1200HZ	165 ⇔ 169	White mode
077	PWM 2000 HZ	170 ⇔ 174	Full mode
078	PWM 4000 HZ	175 ⇔ 239	Color Macros HTP on
079	PWM 6000 HZ	240 ⇔ 247	Color Macros HTP off
080	PWM 15000 HZ	248 ⇔ 255	Reserved for future use
081	Reserved for future use		

LED Macro

Value	Percent/Setting	Value	Percent/Setting
000 ⇔ 015	No function	**136 ⇔ 137**	Auto color macro 38
016 ⇔ 017	Color-controllable macro 1	**138 ⇔ 139**	Auto color macro 39
018 ⇔ 019	Color-controllable macro 2	**140 ⇔ 141**	Auto color macro 40
020 ⇔ 021	Color-controllable macro 3	**142 ⇔ 143**	Auto color macro 41
022 ⇔ 023	Color-controllable macro 4	**144 ⇔ 145**	Auto color macro 42
024 ⇔ 025	Color-controllable macro 5	**146 ⇔ 147**	Auto color macro 43
026 ⇔ 027	Color-controllable macro 6	**148 ⇔ 149**	Auto color macro 44
028 ⇔ 029	Color-controllable macro 7	**150 ⇔ 151**	Auto color macro 45
030 ⇔ 031	Color-controllable macro 8	**152 ⇔ 153**	Auto color macro 46
032 ⇔ 033	Color-controllable macro 9	**154 ⇔ 155**	Auto color macro 47
034 ⇔ 035	Color-controllable macro 10	**156 ⇔ 157**	Auto color macro 48
036 ⇔ 037	Color-controllable macro 11	**158 ⇔ 159**	Auto color macro 49
038 ⇔ 039	Color-controllable macro 12	**160 ⇔ 161**	Auto color macro 50
040 ⇔ 041	Color-controllable macro 13	**162 ⇔ 163**	Auto color macro 51
042 ⇔ 043	Color-controllable macro 14	**164 ⇔ 165**	Auto color macro 52
044 ⇔ 045	Color-controllable macro 15	**166 ⇔ 167**	Auto color macro 53
046 ⇔ 047	Color-controllable macro 16	**168 ⇔ 169**	Auto color macro 54
048 ⇔ 049	Color-controllable macro 17	**170 ⇔ 171**	Auto color macro 55
050 ⇔ 051	Color-controllable macro 18	**172 ⇔ 173**	Auto color macro 56
052 ⇔ 053	Color-controllable macro 19	**174 ⇔ 175**	Auto color macro 57
054 ⇔ 055	Color-controllable macro 20	**176 ⇔ 177**	Auto color macro 58
056 ⇔ 057	Color-controllable macro 21	**178 ⇔ 179**	Auto color macro 59
058 ⇔ 059	Color-controllable macro 22	**180 ⇔ 181**	Auto color macro 60
060 ⇔ 061	Color-controllable macro 23	**182 ⇔ 183**	Auto color macro 61
062 ⇔ 063	Color-controllable macro 24	**184 ⇔ 185**	Auto color macro 62
064 ⇔ 065	Color-controllable macro 25	**186 ⇔ 187**	Auto color macro 63
066 ⇔ 067	Color-controllable macro 26	**188 ⇔ 189**	Auto color macro 64
068 ⇔ 069	Color-controllable macro 27	**190 ⇔ 191**	Auto color macro 65
070 ⇔ 071	Color-controllable macro 28	**192 ⇔ 193**	Auto color macro 66
072 ⇔ 073	Color-controllable macro 29	**194 ⇔ 195**	Auto color macro 67
074 ⇔ 075	Color-controllable macro 30	**196 ⇔ 197**	Auto color macro 68
076 ⇔ 077	Color-controllable macro 31	**198 ⇔ 199**	Auto color macro 69
078 ⇔ 079	Color-controllable macro 32	**200 ⇔ 201**	Auto color macro 70
080 ⇔ 081	Color-controllable macro 33	**202 ⇔ 203**	Auto color macro 71
082 ⇔ 083	Color-controllable macro 34	**204 ⇔ 205**	Auto color macro 72
084 ⇔ 085	Color-controllable macro 35	**206 ⇔ 207**	Auto color macro 73
086 ⇔ 087	Color-controllable macro 36	**208 ⇔ 255**	Auto color macro 74 (main macro)
088 ⇔ 135	Color-controllable macro 37 (main macro)		

Zoom Zones

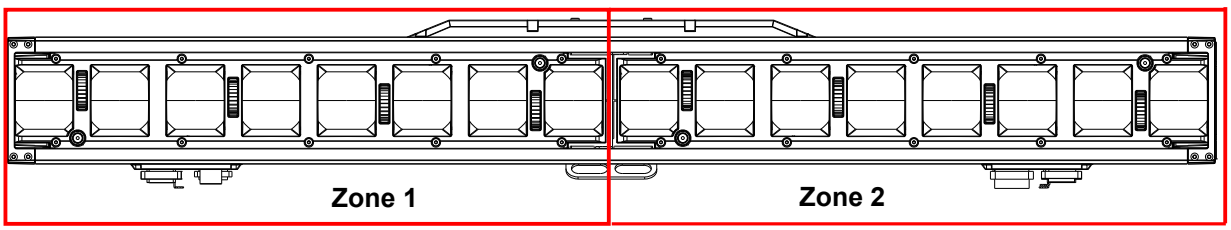

Patterns

1	○●●●●●●●○●●●●●●●	65	○●●○●○●●○●●○●○●●	129	●○○○○●●●●○○○○●●●	193	●○○○●●●○●○○○●●●○
2	●○●●●●●●●○●●●●●●	66	○●●○●●○●○●●○●●○●	130	●○○○●○●●●○○○●○●●	194	●○○○●●○○●○○○●●○○
3	●●○●●●●●●●○●●●●●	67	○●●○●●●○○●●○●●●○	131	●○○○●●○●●○○○●●○●	195	●●○○●○○○●●○○●○○○
4	●●●○●●●●●●●○●●●●	68	○●●●○○●●○●●●○○●●	132	●○○○●●●○●○○○●●●○	196	●●○○○●○○●●○○○●○○
5	●●●●○●●●●●●●○●●●	69	○●●●○●○●○●●●○●○●	133	●○○●○○●●●○○●○○●●	197	○○○○○○●●○○○○○○●●
6	●●●●●○●●●●●●●○●●	70	○●●●○●●○○●●●○●●○	134	●○○●○●○●●○○●○●○●	198	○○○○○●○●○○○○○●○●
7	●●●●●●○●●●●●●●○●	71	○●●●●○○●○●●●●○○●	135	●○○●○●●○●○○●○●●○	199	○○○○○●●○○○○○○●●○
8	●●●●●●●○●●●●●●●○	72	○●●●●○●○○●●●●○●○	136	●○○●●○○●●○○●●○○●	200	●○○○○○○●●○○○○○○●
9	●●●●●●●●●●●●●●●●	73	○●●●●●○○○●●●●●○○	137	●○○●●○●○●○○●●○●○	201	●○○○○○●○●○○○○○●○
10	○○●●●●●●○○●●●●●●	74	●○●○○●●●●○●○○●●●	138	●○○●●●○○●○○●●●○○	202	●○●○○○○○●○●○○○○○
11	○●○●●●●●○●○●●●●●	75	●○●○●○●●●○●○●○●●	139	●○●○○○●●●○●○○○●●	203	●○○○○○○○●○○○○○○○
12	○●●○●●●●○●●○●●●●	76	●○●○●●○●●○●○●●○●	140	●○●○○●○●●○●○○●○●	204	○●○○○○○●○●○○○○○●
13	○●●●○●●●○●●●○●●●	77	●○●○●●●○●○●○●●●○	141	●○●○○●●○●○●○○●●○	205	○●○○○○●○○●○○○○●○
14	○●●●●○●●○●●●●○●●	78	●○●●○○●●●○●●○○●●	142	●○●○●○○●●○●○●○○●	206	○●●○○○○○○●●○○○○○
15	○●●●●●○●○●●●●●○●	79	●○●●○●○●●○●●○●○●	143	●○●○●○●○●○●○●○●○	207	●○●○○○○○●○●○○○○○
16	○●●●●●●○○●●●●●●○	80	●○●●○●●○●○●●○●●○	144	●○●○●●○○●○●○●●○○	208	○○○○○○○●○○○○○○○●
17	●○○●●●●●●○○●●●●●	81	●○●●●○○●●○●●●○○●	145	●○●●○○○●●○●●○○○●	209	○○○○○○●○○○○○○○●○
18	●○●○●●●●●○●○●●●●	82	●○●●●○●○●○●●●○●○	146	●○●●○○●○●○●●○○●○	210	○○○○○●○○○○○○○●○○
19	●○●●○●●●●○●●○●●●	83	●○●●●●○○●○●●●●○○	147	●○●●●○○○●○●●●○○○	211	○○○○●○○○○○○○●○○○
20	●○●●●○●●●○●●●○●●	84	●●○●○○●●●●○●○○●●	148	●●○○○○●●●●○○○○●●	212	○○○●○○○○○○○●○○○○
21	●○●●●●○●●○●●●●○●	85	●●○●○●○●●●○●○●○●	149	●●○○○●○●●●○○○●○●	213	○○●○○○○○○○●○○○○○
22	●○●●●●●○●○●●●●●○	86	●●○●○●●○●●○●○●●○	150	●●○○○●●○●●○○○●●○	214	○●○○○○○○○●○○○○○○
23	●●○○●●●●●●○○●●●●	87	●●○●●○○●●●○●●○○●	151	●●○○●○○●●●○○●○○●	215	●○○○○○○○●○○○○○○○
24	●●○●○●●●●●○●○●●●	88	●●○●●○●○●●○●●○●○	152	●●○○●○●○●●○○●○●○	216	○●●●●●●●●●●●●●●●
25	●●○●●○●●●●○●●○●●	89	●●○●●●○○●●○●●●○○	153	●●○○●●○○●●○○●●○○	217	●○●●●●●●●●●●●●●●
26	●●○●●●○●●●○●●●○●	90	●●●○●○○●●●●○●○○●	154	●●○●○○○●●●○●○○○●	218	●●○●●●●●●●●●●●●●
27	●●○●●●●○●●○●●●●○	91	●●●○●○●○●●●○●○●○	155	●●○●○○●○●●○●○○●○	219	●●●○●●●●●●●●●●●●
28	●●●○○●●●●●●○○●●●	92	●●●○●●○○●●●○●●○○	156	●●○●○●○○●●○●○●○○	220	●●●●○●●●●●●●●●●●
29	●●●○●○●●●●●○●○●●	93	●●●●○●○○●●●●○●○○	157	●●○●●○○○●●○●●○○○	221	●●●●●○●●●●●●●●●●
30	●●●○●●○●●●●○●●○●	94	○○○○●●●●○○○○●●●●	158	●●●○○○○●●●●○○○○●	222	●●●●●●○●●●●●●●●●
31	●●●○●●●○●●●○●●●○	95	○○○●○●●●○○○●○●●●	159	●●●○○○●○●●●○○○●○	223	●●●●●●●○●●●●●●●●
32	●●●●○○●●●●●●○○●●	96	○○○●●○●●○○○●●○●●	160	●●●○●○○○●●●○●○○○	224	●●●●●●●●○●●●●●●●
33	●●●●○●○●●●●●○●○●	97	○○○●●●○●○○○●●●○●	161	●●●●○○○○●●●●○○○○	225	●●●●●●●●●○●●●●●●
34	●●●●○●●○●●●●○●●○	98	○○○●●●●○○○○●●●●○	162	○○○○○●●●○○○○○●●●	226	●●●●●●●●●●○●●●●●
35	●●●●●○○●●●●●●○○●	99	○○●○○●●●○○●○○●●●	163	○○○○●○●●○○○○●○●●	227	●●●●●●●●●●●○●●●●
36	●●●●●○●○●●●●●○●○	100	○○●○●○●●○○●○●○●●	164	○○○○●●○●○○○○●●○●	228	●●●●●●●●●●●●○●●●
37	●●●●●●○○●●●●●●○○	101	○○●○●●○●○○●○●●○●	165	○○○○●●●○○○○○●●●○	229	●●●●●●●●●●●●●○●●
38	○○○●●●●●○○○●●●●●	102	○○●○●●●○○○●○●●●○	166	●○○○○○●●●○○○○○●●	230	●●●●●●●●●●●●●●○●
39	○○●○●●●●○○●○●●●●	103	○○●●○○●●○○●●○○●●	167	●○○○○●○●●○○○○●○●	231	●●●●●●●●●●●●●●●○
40	○○●●○●●●○○●●○●●●	104	○○●●○●○●○○●●○●○●	168	●○○○○●●○●○○○○●●○	232	●●●●●●●●●○○○○○○○
41	○○●●●○●●○○●●●○●●	105	○○●●○●●○○○●●○●●○	169	●●○○○○○●●●○○○○○●	233	●●●●●●●●○○○○○○○○
42	○○●●●●○●○○●●●●○●	106	○○●●●○○●○○●●●○○●	170	●●○○○○●○●●○○○○●○	234	●●●●●●●○○○○○○○○○
43	○○●●●●●○○○●●●●●○	107	○○●●●○●○○○●●●○●○	171	●●●○○○○○●●●○○○○○	235	●●●●●●○○○○○○○○○○
44	●○○○●●●●●○○○●●●●	108	○○●●●●○○○○●●●●○○	172	○●○○○○●●○●○○○○●●	236	●●●●●○○○○○○○○○○○
45	●○○●○●●●●○○●○●●●	109	○●○○○●●●○●○○○●●●	173	○●○○○●○●○●○○○●○●	237	●●●●○○○○○○○○○○○○
46	●○○●●○●●●○○●●○●●	110	○●○○●○●●○●○○●○●●	174	○●○○○●●○○●○○○●●○	238	●●●○○○○○○○○○○○○○
47	●○○●●●○●●○○●●●○●	111	○●○○●●○●○●○○●●○●	175	○●●○○○○●○●●○○○○●	239	●●○○○○○○○○○○○○○○
48	●○○●●●●○●○○●●●●○	112	○●○○●●●○○●○○●●●○	176	○●●○○○●○○●●○○○●○	240	●○○○○○○○○○○○○○○○
49	●●○○○●●●●●○○○●●●	113	○●○●○○●●○●○●○○●●	177	○○●●○○○●○○●●○○○●	241	○○●●●●●●●●●●●●●●
50	●●○○●○●●●●○○●○●●	114	○●○●○●○●○●○●○●○●	178	○○●●○○●○○○●●○○●○	242	○○○●●●●●●●●●●●●●
51	●●○○●●○●●●○○●●○●	115	○●○●○●●○○●○●○●●○	179	○○●●●○○○○○●●●○○○	243	○○○○●●●●●●●●●●●●
52	●●○○●●●○●●○○●●●○	116	○●○●●○○●○●○●●○○●	180	○○○●○○●●○○○●○○●●	244	○○○○○●●●●●●●●●●●
53	●●●○○○●●●●●○○○●●	117	○●○●●○●○○●○●●○●○	181	○○○●○●○●○○○●○●○●	245	○○○○○○●●●●●●●●●●
54	●●●○○●○●●●●○○●○●	118	○●○●●●○○○●○●●●○○	182	○○○●○●●○○○○●○●●○	246	○○○○○○○●●●●●●●●●
55	●●●○○●●○●●●○○●●○	119	○●●○○○●●○●●○○○●●	183	○○○●●○○●○○○●●○○●	247	○○○○○○○○●●●●●●●●
56	●●●●○○○●●●●●○○○●	120	○●●○○●○●○●●○○●○●	184	○○○●●○●○○○○●●○●○	248	○○○○○○○○○●●●●●●●
57	●●●●○○●○●●●●○○●○	121	○●●○○●●○○●●○○●●○	185	○○○●●●○○○○○●●●○○	249	○○○○○○○○○○●●●●●●
58	●●●●●○○○●●●●●○○○	122	○●●○●○○●○●●○●○○●	186	○○○○●○●●○○○○●○●●	250	○○○○○○○○○○○●●●●●
59	○●○○●●●●○●○○●●●●	123	○●●○●○●○○●●○●○●○	187	○○○○●●○●○○○○●●○●	251	○○○○○○○○○○○○●●●●
60	○●○●○●●●○●○●○●●●	124	○●●○●●○○○●●○●●○○	188	○○○○●●●○○○○○●●●○	252	○○○○○○○○○○○○○●●●
61	○●○●●○●●○●○●●○●●	125	○●●●○○○●○●●●○○○●	189	●○○●○○○●●○○●○○○●	253	○○○○○○○○○○○○○○●●
62	○●○●●●○●○●○●●●○●	126	○●●●○○●○○●●●○○●○	190	●○○●○○●○●○○●○○●○	254	○○○○○○○○○○○○○○○●
63	○●○●●●●○○●○●●●●○	127	○●●●○●○○○●●●○●○○	191	●○○●●○○○●○○●●○○○	255	○○○○○○○○○○○○○○○○
64	○●●○○●●●○●●○○●●●	128	○●●●●○○○○●●●●○○○	192	●○○○●○○●●○○○●○○●		

Configuration

Test Mode

Auto Test

To perform an auto test of the COLORado PXL Bar 16, follow the instructions below:

1. Go to the **Run Mode** main level.
2. Select **Auto Test**.

Manual Test

To test the functions of the COLORado PXL Bar 16 manually, do the following:

1. Go to the **Run Mode** main level.
2. Select **Manual Test**.
3. Select the function (**Tilt**, **P/T Speed**, **Red**, **Green**, **Blue**, **White**, **CTC**, **Color**, **Pattern**, **LED Macro**, **LED Ma. Speed**, **LED Ma. Fade**, **Background**, **Background Dim.**, **Dimmer**, **Shutter**, **Function**, **Zoom1**, and **Zoom2**) to test.
4. Change the value of the tested function, **000–255**.

Setup

Network Settings

To adjust the IP Mode, IP Byte, and SubMask settings, follow the instructions below:

1. Go to the **Setup** main level.
2. Select **Network Settings**.

IP mode

The IP address of the COLORado PXL Bar 16 can be set manually, by the network, or to a preset static address specific to each product. To set the IP Mode, do the following:

1. Navigate to **Network Settings**.
2. Select **IP Mode**.
3. Select among:
   - **Manual** – set the IP address with the control panel
   - **DHCP** – the network sets the IP address
   - **Static** – a preset address specific to each product

IP byte

In Manual IP Mode, the IP address must be assigned using the product menu. To set the IP address in Manual IP Mode, follow the instructions below:

1. Navigate to **Network Settings**.
2. Select **IP**.
3. Select from **IP Byte 1** to **4**.
4. Change the value of each IP Byte, **000–255**.

Subnet mask

In Manual IP Mode, the Subnet Mask must be assigned using the product menu. To set the Subnet Mask in Manual IP mode, do the following:

1. Navigate to **Network Settings**.
2. Select **SMK**.
3. Select from **SubMask 1** to **4**.
4. Change the value of each SubMask, **000–255**.

Tilt Orientation

To set whether the tilt orientation is normal or inverted, follow the instructions below:

1. Go to the **Setup** main level.
2. Select **Tilt Reverse**.
3. Select **NO** (normal tilt) or **YES** (reversed tilt).

Zoom Orientation

To set whether the zoom goes from wide to narrow or from narrow to wide, do the following:

1. Go to the **Setup** main level.
2. Select **Zoom Reverse**.
3. Select **NO** (wide to narrow) or **YES** (narrow to wide).

Display Orientation

To set which way the display faces, follow the instructions below:

1. Go to the **Setup** main level.
2. Select **Screen Reverse**.
3. Select **NO** (display is normal), **YES** (display is inverted), or **AUTO** (the display automatically detects which way the product is facing and orients itself accordingly).

Tilt Angle Range

To set the range of motion the tilt is permitted, do the following:

1. Go to the **Setup** main level.
2. Select **Tilt Angle**.
3. Select **200** (200° tilt), **180** (180° tilt), or **60** (60° tilt).

Blackout on Tilt Movement

To set whether the product will black out during tilt movement, follow the instructions below:

1. Go to the **Setup** main level.
2. Select **BL. O. T Move**.
3. Select **NO** (do not black out) or **YES** (black out during movement).

Backlight Timer

To set the amount of time after inactivity before the display backlight turns off, do the following:

1. Go to the **Setup** main level.
2. Select **Backlight Timer**.
3. Select **30S** (after 30 seconds of inactivity), **1M** (after 1 minute of inactivity), **5M** (after 5 minutes of inactivity), or **ON** (does not turn off).

Loss of Data

In case of any loss of input signal, the COLORado PXL Bar 16 will respond in one of two ways: The product will either hold the last signal received, or black out all LED output.

To set how the product responds, follow the instructions below:

1. Go to the **Setup** main level.
2. Select **Loss of Data**.
3. Select **Hold** (hold last signal received) or **Close** (black out all LED output).

Fan Speed

To set the speed of the fans, do the following:

1. Go to the **Setup** main level.
2. Select **Fans**.
3. Select **Auto** (fan speed set according to product temperature), **Full** (maximum speed), or **ECO** (quiet fan mode).

Defrost Fan

To activate or deactivate the defrost fan, follow the instructions below:

1. Go to the **Setup** main level.
2. Select **Defrost Fan**.
3. Select **OFF** (deactivate defrost fan) or **ON** (activate defrost fan).

Color-Mixing Mode

The COLORado PXL Bar 16 has a mode that emulates CMY (cyan, magenta, and yellow) color mixing. In this mode, the dimming is reversed (000 = 100%, 255 = 0%), and the red, green, and blue channels control cyan, magenta, and yellow, respectively.

To set the color-mixing mode, do the following:

1. Go to the **Setup** main level.
2. Select **C Mixing Mode**.
3. Select **RGBW** (additive mode: 0–100%) or **CMY** (subtractive mode: 100–0%).

Dimmer Curve

To set the dimmer curve, follow the instructions below:

1. Go to the **Setup** main level.
2. Select **Dimmer Curve**.
3. Select **Linear** (increase in light intensity is linear), **Square** (light intensity control is finer at low levels and coarser at high levels), **I Squa** (light intensity control is coarser at low levels and finer at high levels), or **SCurve** (light intensity is finer at low and high levels, and coarser at medium levels).

Dimmer Speed

To set the dimmer speed, do the following:

1. Go to the **Setup** main level.
2. Select **Dimmer Speed**.
3. Select **Smooth** or **Fast**.

LED Frequency

This option changes the Pulse Width Modulation (PWM) frequency of the LEDs on the COLORado PXL Bar 16.

1. Go to the **Setup** main level.
2. Go to the **PWM Option** main level.
3. Select PWM frequency (**600Hz**, **1200Hz**, **2000Hz**, **4000Hz**, **6000Hz**, or **25Khz**).

Cell Order

To set how the light is activated, follow the instructions below:

1. Go to the **Setup** main level.
2. Select **Cell Order**.
3. Choose **1–16** (light activates from left to right) or **16–1** (light activates from right to left).

Calibrated White

When activated, calibrated white sets the light output temperature to 7500K. To set the calibrated white setting, do the following:

1. Go to the **Setup** main level.
2. Select **Calibrated White**.
3. Select **ON** (activates calibrated white), **OFF** (deactivates calibrated white), or **Custom** (adjust light output temperature using the White Balance setting).

White Balance

To set the maximum values of a given LED color to create a white light output, follow the instructions below:

1. Go to the **Setup** main level.
2. Select **White Balance**.
3. Select the color value to be changed (**Red**, **Green**, **Blue**, or **White**).
4. Set the color value, **000–255**.

Preset Functions

The COLORado PXL Bar 16 has three presets. Every time a settings is changed in the fixture, the current preset is updated to include that change. To load a preset, do the following:

1. Go to the **Setup** main level.
2. Select **Preset Select**.
3. Select the preset to load (**PRESET A**, **PRESET B**, or **PRESET C**).
4. The selected preset will load, and all changes made to the settings will save to that preset.

Presets can be uploaded to other COLORado PXL Bar 16 using a DMX connection. To do so:

1. Connect the DMX Out of the product that has the desired presets to the DMX In of the product to be updated.
2. Power on both products.
3. On the product with the desired presets, go to the **Setup** main level.
4. Select **Preset Sync**.
5. Select **NO** (do not upload settings) or **YES** (upload settings).

Reset Functions

To reset the tilt, zoom, or all functions as if from startup, follow the instructions below:

1. Go to the **Setup** main level.
2. Select **Reset Function**.
3. Select the function to be reset (**Tilt**, **Zoom**, or **All**).
4. Select **NO** (do not reset) or **YES** (reset).

Factory Reset

To restore the COLORado PXL Bar 16 to factory default settings, do the following:

1. Go to the **Setup** main level.
2. Select **Factory Settings**.
3. Select **NO** (do not reset) or **YES** (reset to factory default settings).

System Information

All the information about the current status of the COLORado PXL Bar 16 is available through the product's **Information** menu. To view this information, follow the instructions below:

1. Go to the **Information** main level.
2. Choose the desired information from the followivng:
   - **Firmware Version** – displays the current firmware version
   - **Running Mode** – displays the current running mode
   - **Address** – displays the current starting address
   - **Temperature** – displays the current product temperature in °C
   - **Fixture Time** – displays the number of hours the fixture has been powered on
   - **LED Hours** – displays the total hours the LED has been powered on
   - **ArtNet Info** – displays the current IP address, Subnet Mask, and MAC address
   - **Device UID** – displays the product UID
   - **Fan Information** – displays the speed of head fans, defrost fans, and base fans

Offset Mode

The offset mode provides fine adjustments for the home position of all the moving parts in the optical path and the tilt movements. This ensures that the moving parts do not show any border or reduce the light output when in their home position.

1. Starting from the Main Level screen, press and hold <**MENU**> until the passcode screen appears.
2. Enter the passcode **2323**.
3. This direct the user to the Zero Adjust menu screen.

Tilt

To adjust the starting point of the tilt motor, do the following:

1. Select **TILT**.
2. Increase or decrease the starting value, from **000** to **255**.

Zoom

To adjust the starting point of the zoom motor, follow the instructions below:

1. Select **ZOOM1** or **ZOOM2**.
2. Increase or decrease the starting value, from **000** to **255**.

MAC Address

To adjust the fourth, fifth, and sixth digit of the MAC address, do the following:

1. Select **MAC4**, **MAC5**, or **MAC6**.
2. Increase or decrease the starting value, from **000** to **255**.

Web Server

The COLORado PXL Bar 16 Web Server can be accessed by any computer on the same network as the product. It allows network access to system information and settings (e.g., control setup, manual testing of all functions, firmware updates, and the ability to change the Web Server password).

1. Connect the product to power, and set the Control Protocol to **Art-Net** and the IP mode to **Static**.
2. Connect the product to a Windows® computer with a network cable.
3. On the computer, set the IP address of the new network to have the same first 3 digits as the IP address of the product (see IP byte).
4. Enter the IP address of the product into the URL bar of a Web browser on the computer.
5. Enter both the User Name and Password as **admin** to log in.

Information

The Information page on the Web Server displays the current settings and the system information of the COLORado PXL Bar 16.

Setup

The Setup page on the Web Server provides options for control, similar to the **Setup** menu on the product. Click **Save Settings** to send the new configuration to the product.

Manual Test

The Manual Test page on the Web Server allows all output functions of the product to be controlled through the browser. To set all functions back to default, click **Reset**.

Firmware Update

The Upgrade page on the Web Server allows the product to be updated with the latest firmware. Go to https://www.chauvetprofessional.com/products/colorado-pxl-bar-16 to download firmware updates.

Security

The Security page on the Web Server gives the option to change the password to the connected product's Web server. Enter the old password (**admin**, by default) and the new password twice, then click **Save Settings** to change the password.

5. Technical Information

Product Maintenance

To maintain optimum performance and minimize wear, clean this product frequently. Usage and environment are contributing factors in determining the cleaning frequency.

Clean this product at least twice a month. Dust build-up reduces light output performance and can cause overheating. This can lead to reduced light source life and increased mechanical wear.

To clean the product:

1. Unplug the product from power.
2. Wait until the product is at room temperature.
3. Use a vacuum (or dry compressed air) and a soft brush to remove dust collected on the external vents.
4. Clean all transparent surfaces with a mild soap solution, ammonia-free glass cleaner, or isopropyl alcohol.
5. Apply the solution directly to a soft, lint free cotton cloth or a lens cleaning tissue.
6. Softly drag any dirt or grime to the outside of the transparent surface.
7. Gently polish the transparent surfaces until they are free of haze and lint.

Always dry the transparent surfaces carefully after cleaning them.

Avoid spinning the cooling fans using compressed air to prevent damage.

6. Technical Specifications

Dimensions and Weight

Length	Width	Height	Weight
39.37 in (1,000 mm)	5.47 in (139 mm)	10.75 in (273 mm)	45.6 lb (20.7 kg)

Note: Dimensions in inches rounded to the nearest decimal digit.

Power

Power Supply Type	Range	Voltage Selection
Switching (internal)	100 to 240 VAC, 50/60 Hz	Auto-ranging

Parameter	100 V, 60 Hz	120 V, 60 Hz	208 V, 60 Hz	230 V, 50 Hz	240 V, 50 Hz
Consumption	835 W	790 W	771 W	768 W	840 W
Operating current	8.35 A	6.60 A	3.82 A	3.49 A	3.50 A
Power-linking current (products)	T/F 8 A, 250 V	T/F 8 A, 250 V	T/F 8 A, 250 V (2 products)	T/F 8 A, 250 V (2 products)	T/F 8 A, 250 V (2 products)

Power I/O	U.S./Worldwide	UK/Europe
Power input connector	Seetronic Powerkon IP65	Seetronic Powerkon IP65
Power output connector	Seetronic Powerkon IP65	Seetronic Powerkon IP65
Power cord plug	Edison (U.S.)	Local plug

Light Source

Type	Color	Quantity	Power	Current	Lifespan
LED	Quad-color RGBW	16	45 W	3.0 A	50,000 hours

Photometrics

Parameter	Total Value	Single Cell Value
Beam angle	5.8° to 30.4°	4° to 29.9°
Field angle	8.9° to 42.2°	5.4° to 42.3°
Cutoff angle	10° to 47.9°	6.1° to 45.5°
Zoom range	5.8° to 47.9°	4° to 45.5°
Illuminance (3.6°)	27,415 lux @ 5m	
Illuminance (47.3°)	1,294 lux @ 5m	

Thermal

Maximum External Temperature	Cooling System
113 °F (45 °C)	Fan-assisted convection

DMX

I/O Connector	Channel Range
5-pin IP-rated XLR	**Single Mode:** 19, 20, 84, 154, or 186 channels **Dual Mode Movement:** 7, 8, 20, or 26 channels **Dual Mode LED:** 48, 64, or 128 channels

Ordering

Product Name	Item Name	Item Code	UPC Number
COLORado PXL Bar 16	COLORADOPXLBAR16	08011855	781462222031

UL 1573
CSA C22.2 No. 166
E113093

Contact Us

General Information	Technical Support
Chauvet World Headquarters	
Address: 3360 Davie Rd. Davie, FL 33314 Voice: (954) 577-4455 Fax: (954) 929-5560 Toll Free: (800) 762-1084	Voice: (844) 393-7575 Fax: (954) 756-8015 Email: chauvetcs@chauvetlighting.com Website: www.chauvetprofessional.com
Chauvet U.K.	
Address: Pod 1 EVO Park Little Oak Drive, Sherwood Park Nottinghamshire, NG15 0EB UK Voice: +44 (0) 1773 511115 Fax: +44 (0) 1773 511110	Email: UKtech@chauvetlighting.eu Website: www.chauvetprofessional.eu
Chauvet Benelux	
Address: Stokstraat 18 9770 Kruishoutem Belgium Voice: +32 9 388 93 97	Email: BNLtech@chauvetlighting.eu Website: www.chauvetprofessional.eu
Chauvet France	
Address: 3, Rue Ampère 91380 Chilly-Mazarin France Voice: +33 1 78 85 33 59	Email: FRtech@chauvetlighting.fr Website: www.chauvetprofessional.eu
Chauvet Germany	
Address: Bruno-Bürgel-Str. 11 28759 Bremen Germany Voice: +49 421 62 60 20	Email: DEtech@chauvetlighting.de Website: www.chauvetprofessional.eu
Chauvet Mexico	
Address: Av. de las Partidas 34 - 3B (Entrance by Calle 2) Zona Industrial Lerma Lerma, Edo. de México, CP 52000 Voice: +52 (728) 690-2010	Email: servicio@chauvet.com.mx Website: www.chauvetprofessional.mx

Warranty & Returns

For warranty terms and conditions and return information, please visit our website.

For customers in the United States and Mexico: www.chauvetlighting.com/warranty-registration.

For customers in the United Kingdom, Republic of Ireland, Belgium, the Netherlands, Luxembourg, France, and Germany: www.chauvetlighting.eu/warranty-registration.